UL 2251

STANDARD FOR SAFETY

Plugs, Receptacles, and Couplers for Electric Vehicles

Single User - Hard Copy || Purchased by Beauti Verlag From SAI Global - IEJ Publishing on 6/16/2014 6:38:39 AM || ALL RIGHTS RESERVED

UL COPYRIGHTED MATERIAL –
NOT AUTHORIZED FOR FURTHER REPRODUCTION OR
DISTRIBUTION WITHOUT PERMISSION FROM UL

UL Standard for Safety for Plugs, Receptacles, and Couplers for Electric Vehicles, UL 2251

Third Edition, Dated February 22, 2013

Summary of Topics

This Third Edition of the Standard for Plugs, Receptacles, and Couplers for Electric Vehicles, UL 2251, is being issued as a Trinational Standard with ANCE and CSA.

The new requirements are substantially in accordance with Proposal(s) on this subject dated March 9, 2012 and November 16, 2012.

All rights reserved. No part of this publication may be reproduced, stored in a retrieval system, or transmitted in any form by any means, electronic, mechanical photocopying, recording, or otherwise without prior permission of UL.

UL provides this Standard "as is" without warranty of any kind, either expressed or implied, including but not limited to, the implied warranties of merchantability or fitness for any purpose.

In no event will UL be liable for any special, incidental, consequential, indirect or similar damages, including loss of profits, lost savings, loss of data, or any other damages arising out of the use of or the inability to use this Standard, even if UL or an authorized UL representative has been advised of the possibility of such damage. In no event shall UL's liability for any damage ever exceed the price paid for this Standard, regardless of the form of the claim.

Users of the electronic versions of UL's Standards for Safety agree to defend, indemnify, and hold UL harmless from and against any loss, expense, liability, damage, claim, or judgment (including reasonable attorney's fees) resulting from any error or deviation introduced while purchaser is storing an electronic Standard on the purchaser's computer system.

The requirements in this Standard are now in effect, except for those paragraphs, sections, tables, figures, and/or other elements of the Standard having future effective dates as indicated in the preface. The prior text for requirements that have been revised and that have a future effective date are located after the Standard, and are preceded by a "SUPERSEDED REQUIREMENTS" notice.

Single User - Hard Copy || Purchased by Beuth Verlag From SAI Global - ILI Publishing on 6/16/2014 8:38:39 AM || ALL RIGHTS RESERVED

UL COPYRIGHTED MATERIAL –
NOT AUTHORIZED FOR FURTHER REPRODUCTION OR
DISTRIBUTION WITHOUT PERMISSION FROM UL

No Text on This Page

Single User - Hard Copy || Purchased by Beuth Verlag From SAI Global - IEI Publishing on 6/18/2014 8:35:39 AM || ALL RIGHTS RESERVED

UL COPYRIGHTED MATERIAL –
NOT AUTHORIZED FOR FURTHER REPRODUCTION OR
DISTRIBUTION WITHOUT PERMISSION FROM UL



Association of Standardization and Certification
NMX-J-678-ANCE-2013
First Edition



CSA Group
CSA C22.2 No. 282-13
First Edition



Underwriters Laboratories Inc.
UL 2251
Third Edition

Standard for Plugs, Receptacles, and Couplers for Electric Vehicles

February 22, 2013

Approved American National Standard



ANSI/UL 2251-2013

UL COPYRIGHTED MATERIAL –
NOT AUTHORIZED FOR FURTHER REPRODUCTION OR
DISTRIBUTION WITHOUT PERMISSION FROM UL

Single User - Hard Copy || Purchased by Bauth Verlag From SAI Global - ILI Publishing on 6/16/2014 6:38:39 AM || ALL RIGHTS RESERVED

Commitment for Amendments

This standard is issued jointly by the Association of Standardization and Certification (ANCE), the Canadian Standards Association (operating as "CSA Group"), and Underwriters Laboratories Inc. (UL). Comments or proposals for revisions on any part of the standard may be submitted to ANCE, CSA Group, or UL at any time. Revisions to this standard will be made only after processing according to the standards development procedures of ANCE, CSA Group, and UL. CSA Group and UL will issue revisions to this standard by means of a new edition or revised or additional pages bearing their date of issue. ANCE will incorporate the same revisions into a new edition of the standard bearing the same date of issue as the CSA Group and UL pages.

Copyright © 2013 ANCE

Rights reserved in favor of ANCE.

ISBN 978-1-55491-818-8 © 2013 CSA Group

All rights reserved. No part of this publication may be reproduced in any form whatsoever without the prior permission of the publisher.

To purchase CSA Group Standards and related publications, visit CSA Group's Online Store at shop.csa.ca or call toll-free 1-800-463-6727 or 416-747-4044.

This Standard is subject to periodic review, and suggestions for its improvement will be referred to the appropriate committee. To submit a proposal for change, please send the following information to inquires@csagroup.org and include "Proposal for change" in the subject line: Standard designation (number); relevant clause, table, and/or figure number; wording of the proposed change; and rationale for the change.

Copyright © 2013 Underwriters Laboratories Inc.

UL's Standards for Safety are copyrighted by UL. Neither a printed nor electronic copy of a Standard should be altered in any way. All of UL's Standards and all copyrights, ownerships, and rights regarding those Standards shall remain the sole and exclusive property of UL.

This ANSI/UL Standard for Safety consists of the Third Edition.

The most recent designation of ANSI/UL 2251 as an American National Standard (ANSI) occurred on February 22, 2013. ANSI approval for a standard does not include the Cover Page, Transmittal Pages, Title Page (front and back), or the Preface.

Comments or proposals for revisions on any part of the Standard may be submitted to UL at any time. Proposals should be submitted via a Proposal Request in UL's On-Line Collaborative Standards Development System (CSDS) at http://csds.ul.com.

To purchase UL Standards, visit Comm 2000 at http://www.comm-2000.com/help/how_to_order.aspx or call toll-free 1-888-853-3503.

Single User - Hard Copy || Purchased by Beuth Verlag From SAI Global - ILI Publishing on 6/10/2014 8:36:39 AM || ALL RIGHTS RESERVED

UL COPYRIGHTED MATERIAL –
NOT AUTHORIZED FOR FURTHER REPRODUCTION OR
DISTRIBUTION WITHOUT PERMISSION FROM UL

CONTENTS

Preface 6

INTRODUCTION

1 Scope 8
2 Definitions 8
3 Components 10
4 Units of Measurement 10
5 Normative References 10

CONSTRUCTION

6 General 11
7 Configurations 11
8 Insulating Materials 11
  8.1 Flammability 11
  8.2 Electrical properties 12
  8.3 Thermal properties 13
9 Protection against Corrosion 13
10 Enclosures 14
  10.1 General 14
  10.2 Mechanical strength 14
  10.3 Nonmetallic enclosures 14
  10.4 Metallic enclosures 15
  10.5 Plug, vehicle connector, and breakaway coupling enclosures 15
  10.6 Environmental enclosures 15
11 Current-Carrying Parts 15
12 Clearances and Creepage Distances 16
13 Accessibility of Live Parts 17
14 Grounding 19
15 Grounding Connections 20
16 Isolation 21
17 Terminal Parts 21
18 Contacts 22
19 Assembly 22
20 Separation of Circuits 23
  20.1 Factory wiring 23
  20.2 Separation barriers 23
  20.3 Field wiring 24
21 Devices Intended to Accommodate a Fuse 24
22 Cable Grip 25
23 Sharp Edges 26

PERFORMANCE

24 Representative Devices 26
25 Accelerated Aging Tests 28
  25.1 Rubber compounds 28
  25.2 PVC compounds 29
26 Mold Stress Relief Test 29

UL COPYRIGHTED MATERIAL –
NOT AUTHORIZED FOR FURTHER REPRODUCTION OR
DISTRIBUTION WITHOUT PERMISSION FROM UL

Single User - Hard Copy || Purchased by Beuth Verlag From SAI Global - ILI Publishing on 8/16/2014 8:38:39 AM || ALL RIGHTS RESERVED

27 Moisture Absorption Resistance 29
28 Humidity Conditioning 30
29 Insulation Resistance Test 31
30 Dielectric Withstand Test 31
31 Dew Point Test 32
32 Conductor Secureness and Pullout Test 32
33 Cable Secureness Test 33
34 Impact Test (Plugs, Vehicle Connectors, and Breakaway Couplings) 34
35 Crush Test 36
36 Vehicle Driveover Test 37
37 Withdrawal Force Test 38
37.1 Plugs and receptacles, vehicle connectors, and vehicle inlets 38
37.2 Breakaway couplings 39
38 Grounding Path Current Test 39
39 Short Circuit Test 40
39.1 General 40
39.2 Protective devices 40
39.3 Calibration of test circuits 43
40 Strength of Insulating Base and Support Test 48
41 No-Load Endurance Test 49
42 Endurance with Load Test 49
43 Overload Test 50
44 Electromagnetic Test (Pilot Contacts) 51
45 Temperature Rise Test 52
46 Fuseholder Temperature Test 53
47 Surface Temperatures 54
48 Resistance to Arcing Test 55
49 Polarization Integrity Test 55
50 Resistance to Corrosion Test 55
51 Vibration Test 56
52 Accelerated Aging Gasket Test 56
53 Permanence of Marking Tests (Mexico and US) 58
54 Enclosure Tests for Environmental Protection 58

RATINGS

55 General 60

MARKINGS

56 General 60
56.1 Company name, catalog designation, electrical rating 60
56.2 Multiple factories 62
56.3 Nonconductive mounting means 62
56.4 Disconnecting use only 62
56.5 AC only devices 62
56.6 Cover grounded devices 62
56.7 Fused devices 62
56.8 Locking-type devices 63
56.9 Receptacle marking location 63
56.10 Wiring information – field wiring terminals 63
56.11 Overcurrent protection 64
56.12 Environmental enclosures 64

UL COPYRIGHTED MATERIAL –
NOT AUTHORIZED FOR FURTHER REPRODUCTION OR
DISTRIBUTION WITHOUT PERMISSION FROM UL

Single User - Hard Copy || Purchased by Beuth Verlag From SAI Global - ILI Publishing on 8/16/2014 8:38:39 AM || ALL RIGHTS RESERVED

56.13 HB flammability use marking (Canada only) 65
56.14 EV cable assembly markings 65
57 Identification and Marking of Terminals 65
57.1 General 65
57.2 Grounded and grounding 65
57.3 Other terminals 68

Annex A – Reference Standards (Normative)

Annex B – French and Spanish Translations (Informative)

B1 French and Spanish Translations 73

Single User - Hard Copy Is Purchased by Belvin Valley From SAI Global - ILI Publishing on 6/16/2014 8:38:39 AM ||| ALL RIGHTS RESERVED

UL COPYRIGHTED MATERIAL –
NOT AUTHORIZED FOR FURTHER REPRODUCTION OR
DISTRIBUTION WITHOUT PERMISSION FROM UL

Preface

This is the harmonized ANCE, CSA Group, and UL Standard for Plugs, Receptacles, and Couplers for Electric Vehicles. It is the First edition of NMX-J-678-ANCE, the First edition of CSA C22.2 No. 282, and the Third edition of UL 2251.

This harmonized standard was prepared by the Association of Standardization and Certification (ANCE), CSA Group, and Underwriters Laboratories Inc. (UL). The efforts and support of the Technical Harmonization Working Group for Electric Vehicle Couplers are gratefully acknowledged.

This standard is considered suitable for use for conformity assessment within the stated scope of the Standard.

The present Mexican Standard was reviewed and approved by the Comité de Normalización de la Asociación de Normalización y Certificación, A.C., CONANCE.

This standard was reviewed by the CSA Subcommittee on Electrical Vehicle–Safety of Plugs, Receptacles, and Couplers, under the jurisdiction of the CSA Technical Committee on Wiring Products and the CSA Strategic Steering Committee on Requirements for Electrical Safety, and has been formally approved by the CSA Technical Committee.

This standard has been approved by the American National Standards Institute (ANSI) as an American National Standard.

Where reference is made to a specific number of specimens to be tested, the specified number is to be considered a minimum quantity.

Note: Although the intended primary application of this standard is stated in its scope, it is important to note that it remains the responsibility of the users of the standard to judge its suitability for their particular purpose.

Level of harmonization

This standard uses the IEC format but is not based on, nor is considered equivalent to, an IEC standard.

This standard is published as an equivalent standard for ANCE, CSA Group, and UL.

An equivalent standard is a standard that is substantially the same in technical content, except as follows: Technical national differences are allowed for codes and governmental regulations as well as those recognized as being in accordance with NAFTA Article 905, for example, because of fundamental climatic, geographical, technological, or infrastructural factors, scientific justification, or the level of protection that the country considers appropriate. Presentation is word for word except for editorial changes.

Reasons for differences from IEC

This standard provides general requirements for plugs, receptacles, and couplers for electric vehicles in accordance with the electrical installation codes of Canada, Mexico, and the United States. At present there is no IEC standard for these products for use in accordance with these codes. Therefore, this standard does not employ any IEC standard for base requirements.

Single User - Hard Copy || Purchased by Berlin Worley From SAI Global - ILI Publishing on 6/16/2014 8:38:39 AM || ALL RIGHTS RESERVED

UL COPYRIGHTED MATERIAL –
NOT AUTHORIZED FOR FURTHER REPRODUCTION OR
DISTRIBUTION WITHOUT PERMISSION FROM UL

Interpretations

The interpretation by the standards development organization of an identical or equivalent standard is based on the literal text to determine compliance with the standard in accordance with the procedural rules of the standards development organization. If more than one interpretation of the literal text has been identified, a revision is to be proposed as soon as possible to each of the standards development organizations to more accurately reflect the intent.

ANCE effective date

The effective date for ANCE will be announced through the Diario Oficial de la Federación (Official Gazette) and is indicated on the cover page.

CSA Group effective date

The effective date for CSA Group will be announced through *CSA Informs* or a CSA Group certification notice.

UL effective date

As of February 22, 2013, all products Listed or Recognized by UL must comply with the requirements in this Standard.

A UL effective date is one established by Underwriters Laboratories Inc. and is not part of the ANSI approved standard.

Single User - Hard Copy Il Purchased by Beuth Verlag From SAI Global - ILI Publishing on 6/16/2014 8:38:39 AM || ALL RIGHTS RESERVED

UL COPYRIGHTED MATERIAL –
NOT AUTHORIZED FOR FURTHER REPRODUCTION OR
DISTRIBUTION WITHOUT PERMISSION FROM UL

INTRODUCTION

1 Scope

1.1 These requirements cover plugs, receptacles, vehicle inlets, vehicle connectors, and breakaway couplings, rated up to 800 amperes and up to 600 volts ac or dc, intended for conductive connection systems, for use with electric vehicles. These devices are for use in either indoor or outdoor nonhazardous locations in accordance with Annex A, Ref. No. 1.

1.2 This Standard does not directly apply to the following:

a) Devices produced integrally with flexible cord or cable that are covered by Annex A, Ref. No. 2;

b) Devices solely intended for direct connection to the branch circuit in accordance with Annex A, Ref. No. 1 such as attachment plugs, cord connectors, and receptacles, which can include 3 or more pilot contacts, that are covered by Annex A, Ref. No. 3;

c) Single and multi-pole connectors, intended for connection to copper conductors, for use in data, signal, control, and power applications within and between electrical equipment, where exposed, for use in accordance with national electrical codes, that are covered by Annex A, Ref. No. 4;

d) Devices of the pin and sleeve type construction, intended to provide power from branch circuits to utilization equipment, or for direct connection of utilization equipment to the branch circuit, that are covered by Annex A, Ref. No. 5;

e) Devices intended for use in hazardous locations that are covered by Annex A, Ref. No. 6;

f) Devices consisting of wiring terminals and supporting blocks intended for the connection of wiring that are covered by Annex A, Ref. No. 7;

g) Devices such as modular jacks and plugs that are intended for use with telecommunications networks, that are covered by Annex A, Ref. Nos. 8 and 9;

h) Devices such as wire connectors and soldering lugs that are covered by Annex A, Ref. Nos. 10 – 12;

i) Devices such as quick-connect terminals that are covered by Annex A, Ref. No. 13;

j) Products such as power outlet assemblies that are covered by Annex A, Ref. No. 14;

k) Products such as switched interlocks that are covered by Annex A, Ref. No. 15.

1.3 In the text of this Standard, the term "device" refers to any product covered by this Standard. The letters "EV" refer to an electric vehicle, including plug-in hybrid vehicles, hybrid vehicles, electric vehicles, battery electric vehicles, and similar vehicles.

2 Definitions

2.1 For the purposes of this Standard, the following definitions apply.

Single User - Hard Copy || Purchased by Fourth Verlag From SAI Global - ULI Publishing on 6/16/2014 6:36:39 AM || ALL RIGHTS RESERVED

UL COPYRIGHTED MATERIAL –
NOT AUTHORIZED FOR FURTHER REPRODUCTION OR
DISTRIBUTION WITHOUT PERMISSION FROM UL

2.2 BREAKAWAY COUPLINGS – A device located within a length of EV cable, between the electric vehicle supply equipment (EVSE) end and the vehicle connector end, that is intended to separate under a pull force, such that its separation will protect the end connections from a strain that could break wiring connections or rupture insulation. These devices are intended to be reconnectable, and may or may not be intended for current interruption.

2.3 CONTACT – A conductive element in a device that mates with a corresponding element in a mating device to provide an electrical conductive path.

2.4 CONTROL PILOT – The primary control conductor that is connected through the control circuitry. It may perform several functions, including assurance that the vehicle is present and connected, start/stop control, and supply equipment current rating; and it provides for continuous monitoring for the Personnel Protection System.

2.5 DELAYED ACTION – An arrangement that delays the separation of device housings to reduce the likelihood of exposure of arcing contacts during the breaking of the circuit when the plug or vehicle connector is withdrawn.

2.6 ENCLOSURE – The case or housing that is used to enclose all live parts and into which the insulator and contacts are assembled.

2.7 EV CABLE ASSEMBLY – A portable cable assembly consisting of a length of EV Cable and provided with a vehicle connector on one end and a plug on the other.

2.8 FIELD WIRING TERMINAL – A terminal to which power supply, control, or equipment grounding connections will be made in the field when the device is installed.

2.9 GROUNDED SYSTEM – A charging system that depends on reliable grounding of the circuitry to provide the basis for the Personnel Protection System. The ground connection is considered to be a protective earth connection, and the circuitry and conductors that make up the ground path are suitable for the potential ground fault currents expected for that product rating.

2.10 INSULATOR – That portion of a device that provides for separation and support of contacts.

2.11 ISOLATED SYSTEM – A charging system that depends on reliable isolation of the circuitry from all dead metal parts or circuits that can be contacted by the user. The isolation is monitored as part of the Personnel Protection System. The ground connection is not relied on for safety and is considered a functional or reference ground. The reference ground connection is used by the isolation monitor to monitor the isolation of the system. The functional or reference ground is not expected to carry ground fault current and, based on this, is not expected to be sized in accordance with the device rating.

2.12 PLUG – A device intended to receive power when inserted into a receptacle. It establishes connection between conductors of the attached electric vehicle cable and the conductors connected to the receptacle.

2.13 RECEPTACLE – A device that is intended to provide power to an inserted plug, and that is usually installed as a fixed outlet on equipment. These devices are not intended to be installed in building structures or as branch circuit devices. See 1.2(b).

2.14 TERMINAL – A conductive part provided on a contact for connecting a conductor.

UL COPYRIGHTED MATERIAL –
NOT AUTHORIZED FOR FURTHER REPRODUCTION OR
DISTRIBUTION WITHOUT PERMISSION FROM UL

Single User - Hard Copy || Purchased by Beuth Verlag From SAI Global - ILI Publishing on 6/10/2014 6:30:39 AM || ALL RIGHTS RESERVED

2.15 VEHICLE CONNECTOR – A connector, that by insertion into a vehicle inlet, establishes an electrical connection to the electric vehicle for the purpose of providing power and information exchange, with means for attachment of electric vehicle cable. This device is a part of the vehicle coupler.

2.16 VEHICLE COUPLER – A means enabling the connection, at will, of an electric vehicle cable to the equipment. It consists of a vehicle connector and a vehicle inlet.

2.17 VEHICLE, ELECTRIC (EV) – An automotive-type vehicle for on-road use, such as passenger automobiles, buses, trucks, vans, neighborhood electric vehicles, and the like, primarily powered by an electric motor that draws current from a rechargeable storage battery, fuel cell, photovoltaic array, or other source of electric current. Plug-in hybrid electric vehicles (PHEV) are considered electric vehicles. For the purpose of this definition, off-road, self-propelled electric vehicles, such as industrial trucks, hoists, lifts, transports, golf carts, airline ground support equipment, tractors, boats, and the like, are not included.§

§Reprinted with permission from NFPA 70®-2011, *National Electrical Code*, Copyright © 2010, National Fire Protection Association, Quincy, MA.

2.18 VEHICLE INLET – The part incorporated in, or fixed to the vehicle, which receives power from a vehicle connector.

3 Components

3.1 Except as indicated in 3.2, a component of a product covered by this Standard shall comply with the requirements for that component.

3.2 A component is not required to comply with a specific requirement that:

a) Involves a feature or characteristic not required in the application of the component in the product covered by this standard, or

b) Is superseded by a requirement in this standard.

3.3 A component shall be used in accordance with its rating established for the intended conditions of use.

3.4 Specific components are incomplete in construction features or restricted in performance capabilities. Such components are intended for use only under limited conditions, such as certain temperatures not exceeding specified limits, and shall be used only under those specific conditions.

4 Units of Measurement

4.1 The values given in SI (metric) units shall be normative. Any other values given shall be for information purposes only.

5 Normative References

5.1 Where reference is made to any standards, such reference shall be considered to refer to the latest editions and revisions thereto available at the time of printing, unless otherwise specified.

Single User - Hard Copy || Purchased by Benito Verlag From SAI Global - IEJ Publishing on 8/18/2014 8:38:39 AM || ALL RIGHTS RESERVED

UL COPYRIGHTED MATERIAL –
NOT AUTHORIZED FOR FURTHER REPRODUCTION OR
DISTRIBUTION WITHOUT PERMISSION FROM UL

5.2 Products covered by this Standard shall comply with the referenced installation codes and standards noted in Annex A as appropriate for the country where the product is to be used. When the product is intended for use in more than one country, the product shall comply with the installation codes and standards for all countries where it is intended to be used.

CONSTRUCTION

6 General

6.1 The ratings mentioned throughout this Standard, including those mentioned in 55.2, represent maximum ampacity and voltage for a device. A device is considered to be for use on either alternating or direct current unless the rating includes a marking to restrict the use to alternating current. See 56.5.

7 Configurations

7.1 The configuration of a device includes the physical dimensions of the device, geometry of the device, and pin configuration of a device. The specific configuration of devices covered by this Standard is not specified in this document. Any configuration complying with these requirements is suitable for use in accordance with the scope of this Standard.

7.2 With reference to 7.1, a particular configuration of plug or vehicle connector will require a similarly configured receptacle or vehicle inlet respectively. This is defined as a mated pair. All devices covered by this Standard are expected to be mated pairs with a plug and receptacle or a vehicle connector and vehicle inlet, covered as one mated device. This requirement applies for all products unless as described in 7.3.

7.3 Devices designed in accordance with the standardized configurations in Annex A, Ref. No. 16, may be evaluated as individual devices, without a specific mating device.

7.4 A breakaway coupling is a mated pair by definition. The configuration of the breakaway coupling shall be such that the two halves of the breakaway coupling can mate together. The breakaway coupling configuration is not required to match the plug or vehicle connector configuration provided continuity of all conductors is maintained when mated.

8 Insulating Materials

8.1 Flammability

8.1.1 All parts that act as the electrical insulation or enclosure of a device shall be of ceramic, or another insulating material permitted for the particular application. Hard rubber is not permitted.

8.1.2 Vulcanized fiber can be used for insulating washers, separators, and barriers, but not as the sole support for live parts. The material shall be moisture resistant in accordance with Moisture Absorption Resistance, 27.

8.1.3 Except as noted in 8.1.4 – 8.1.6, a polymeric material used for electrical insulation, an internal barrier necessary to maintain electrical spacings, or enclosure of live parts shall have a flame class rating of HB or better in accordance with Annex A, Ref. No. 17.

In Canada, vehicle connectors provided with an enclosure material constructed of a material rated HB, shall be marked in accordance with 56.13.1. In Mexico and the US, this marking in 56.13.1 is not required.

UL COPYRIGHTED MATERIAL –
NOT AUTHORIZED FOR FURTHER REPRODUCTION OR
DISTRIBUTION WITHOUT PERMISSION FROM UL

Single User - Hard Copy || Purchased by Beuth Verlag From SAI Global - ILI Publishing on 6/19/2014 8:30:39 AM || ALL RIGHTS RESERVED

8.1.4 The internal insulating systems of components where component requirements exist need not have a flame class rating.

8.1.5 A small part meeting all the following criteria need not have a flame class rating:

a) Its volume does not exceed 2 cm^3 (0.122^3 inch),

b) Its maximum dimension does not exceed 3 cm (1.18 inches), and

c) Its location is such that it cannot propagate flame from one area to another or act as a bridge between a possible source of ignition and other ignitable parts.

8.1.6 Fiber and similar material that is equal to or less than 0.25 mm (0.010 inch) thick need not have a flame class rating.

8.2 Electrical properties

8.2.1 Except as noted in 8.2.2 – 8.2.6, a polymeric material used for electrical insulation, an internal barrier necessary to maintain electrical spacings, or enclosure of live parts shall comply with Table 1. If tests are needed to verify compliance, the material shall be tested in accordance with the applicable test in Annex A, Ref. No. 18.

8.2.2 The internal insulating systems of components where component requirements exist need not comply with the requirements in 8.2.1.

8.2.3 A small part meeting all the following criteria need not comply with the requirements in 8.2.1.

a) Its volume does not exceed 2 cm^3 (0.122 $inch^3$),

b) *Its maximum dimension does not exceed 3 cm (1.18 inches), and*

c) *Its location is such that it cannot propagate flame from one area to another or act as a bridge between a possible source of ignition and other ignitable parts.*

8.2.4 Fiber and similar material that is equal to or less than 0.25 mm (0.010 inch) thick need not comply with the requirements in 8.2.1.

8.2.5 A polymeric material used in an enclosure of a plug or connector which does not enclose live parts, or which encloses insulated live parts where the insulation thickness is greater than 0.071 mm (0.028 inch), need not comply with the requirements for Hot Wire Ignition in Table 1.

8.2.6 A polymeric material used in an enclosure that is separated through air by more than 0.8 mm (1/32 inch) from uninsulated live parts and more than 12.7 mm (1/2 inch) from arcing parts need not comply with the requirements in 8.2.1.

Single User - Hard Copy || Purchased by Beuth Verlag From SAI Global - ILI Publishing on 6/16/2014 6:38:39 AM || ALL RIGHTS RESERVED

UL COPYRIGHTED MATERIAL –
NOT AUTHORIZED FOR FURTHER REPRODUCTION OR
DISTRIBUTION WITHOUT PERMISSION FROM UL

Table 1
Hot wire ignition (HWI) and high-current arc resistance to ignition (HAI) ratings of insulating materials

Flammability classification[a,d]	CTI		HWI[b]		HAI[c]	
	Voltage (V)	PLC	Mean ignition time (sec)	PLC	Mean no. of arcs	PLC
V-0, VTM-0	175 to 249	3	7 and up to 15	4	15 and up to 30	3
V-1, VTM-1	175 to 249	3	15 and up to 30	3	30 and up to 60	3
V-2, VTM-2	175 to 249	3	30 and up to 60	3	30 and up tp 60	3
HB	175 to 249	3	30 and up to 60	2	60 and up to 120	1

[a] Flammability Classification – described in Annex A, Ref. No. 17.

[b] Hot Wire Resistance to Ignition – described in Annex A, Ref. No. 18.

[c] High-Current Arc Resistance to Ignition – described in Annex A, Ref. No. 19.

[d] A material rated 5VA or 5VB which also carries a V-0 rating, shall apply the values for a V-0 rating. A material rated 5VA or 5VB with no additional V-0 rating shall apply the values for a V-1 rating.

8.3 Thermal properties

8.3.1 A polymeric material used for electrical insulation or enclosure of live parts shall have the relative thermal index ratings shown in Table 2 for the specific application of the insulating material. This requirement does not apply to epoxy potting materials.

Table 2
Minimum relative thermal indices of insulating materials used in insulation and enclosure applications

Application	Minimum relative thermal index[a], Degrees C		
	Electrical	Mechanical[b]	
		With impact	Without impact
ELECTRICAL INSULATION			
All devices	100	100	100
ENCLOSURE or parts of an ENCLOSURE			
A. All permanently wired devices and other devices containing fuses	100	100	100
B. All other devices	100	100	100

[a] Relative thermal index – Described in Annex A, Ref. No. 19. In Mexico and the US, for materials with other than VTM flammability classifications, the material shall be evaluated using specimen thickness of no more than the thickness employed in the end product or nominal 3.2 mm (1/8 inch) thickness, whichever is greater. In Canada, for materials with other than VTM flammability classifications, the material shall be evaluated using specimen thickness of no more than the thickness employed in the end product or nominal 1.6 mm (1/16 inch) thickness, whichever is greater.

[b] For filament wound tubing, industrial laminates, vulcanized fiber and similar polymeric materials, the minimum RTI for mechanical shall be the values specified for Electrical.

9 Protection against Corrosion

9.1 Parts of iron or steel other than stainless steel parts shall be protected against corrosion, in accordance with the Resistance to Corrosion Test, 50.

UL COPYRIGHTED MATERIAL –
NOT AUTHORIZED FOR FURTHER REPRODUCTION OR
DISTRIBUTION WITHOUT PERMISSION FROM UL

Single User - Hard Copy Is Purchased by Beth Verlag From SAI Global - ILI Publishing on 6/18/2014 8:39:39 AM || ALL RIGHTS RESERVED

10 Enclosures

10.1 General

10.1.1 An enclosure shall be constructed so as to reduce the risk of unintentional contact with uninsulated live parts, see 13.1, and to provide internal parts with protection from specified external conditions.

10.2 Mechanical strength

10.2.1 An enclosure shall have adequate strength and rigidity for its intended use. It shall not permit any increase in shock or fire hazard due to total or partial collapse with resulting reduction in spacings, loosening, or displacement of parts, or other serious defects. See the Impact Test, 34, the Crush Test, 35, and the Vehicle Drive Over Test, 36.

10.3 Nonmetallic enclosures

10.3.1 An enclosure can be made of a polymeric material if the material and design have been investigated and found suitable for the purpose.

10.3.2 A nonmetallic enclosure or a nonmetallic part of an enclosure shall comply with the applicable requirements in Annex A, Ref. No. 20, except as modified by this Standard.

10.3.3 Among the factors taken into consideration when an enclosure is being judged are:

a) Mechanical strength in accordance with 10.2,

b) Moisture-absorptive properties in accordance with 8.1.2,

c) Combustibility in accordance with 8.1.3,

d) Resistance to distortion or physical damage at temperatures to which the material can be subjected under conditions of normal or abnormal usage in accordance with Accelerated Aging Tests, 25, and

e) Resistance to atmospheric effects - rain and sunlight in the case of a device intended for outdoor use - in accordance with 10.3.4.

For a nonmetallic enclosure all of these factors shall be considered with respect to thermal aging.

10.3.4 If a nonmetallic enclosure or a nonmetallic part of an enclosure is used on a device intended for use outdoors, the performance of the enclosure material shall not be adversely affected by water, exposure to UV, and other atmospheric effects. The enclosure shall comply with the requirements in Annex A, Ref. No. 20.

10.3.5 If a nonmetallic enclosure is identified as being intended to be exposed to specific chemicals, oils, acids, solvents, cleaning agents, and the like, the performance of the enclosure material shall not be adversely affected by such substances as determined by applicable tests as described in Annex A, Ref. No. 18.

Single User - Hard Copy || Purchased by Beuth Verlag From SAI Global - ULI Publishing on 8/16/2014 6:38:38 AM || ALL RIGHTS RESERVED

UL COPYRIGHTED MATERIAL –
NOT AUTHORIZED FOR FURTHER REPRODUCTION OR
DISTRIBUTION WITHOUT PERMISSION FROM UL

10.3.6 Pliable, molded natural or synthetic rubber, or a combination thereof, or a pliable composition of which the basic constituent is vinyl chloride or a copolymer of vinyl chloride and vinyl acetate, in the finished device that complies with the Accelerated Aging Tests, 25, can be employed as an insulating material for the body of a plug, a vehicle connector, or breakaway coupling.

10.4 Metallic enclosures

10.4.1 Except as noted in 10.4.2, an enclosure can be constructed of iron, steel, copper, brass, bronze, zinc, or aluminum alloys containing not less than 80 percent aluminum. Magnesium or its alloys shall not be used.

10.4.2 Zinc or a zinc-based alloy shall not be used for an enclosure or parts of an enclosure which are in the primary grounding path.

10.5 Plug, vehicle connector, and breakaway coupling enclosures

10.5.1 A plug, vehicle connector, or breakaway coupling shall not be provided with more than one cable-outlet hole, unless the additional holes are capable of being closed or do not expose live parts.

10.6 Environmental enclosures

10.6.1 An enclosure shall be marked with one or more enclosure type designations indicating the environmental conditions for which it is intended in accordance with 56.12. The enclosure shall comply with the requirements applicable to the enclosure type number or numbers. See Enclosure Tests for Environmental Protection, 54.

11 Current-Carrying Parts

11.1 Except as noted in 11.2 and 11.3, a current-carrying part shall be of silver, copper, or a copper alloy, or other material acceptable for the application. Plated iron or steel shall not be used for parts that are depended upon to carry current. Wire binding screws shall not be of iron or steel. Current carrying parts of contact shall comply with the requirements in Contacts, 18.

11.2 Stainless steel can be employed for a part not subject to arcing.

11.3 Pressure wire terminal screws can be made of plated iron or steel.

11.4 Iron or steel, if protected against corrosion by zinc, tin, or equivalent plating, can be used for screws, plates, yokes, or other parts that are employed as a means of clamping the conductor, providing such parts are not the primary current-carrying members.

11.5 Suitable means shall be provided for retaining live parts within such limits of alignment as to ensure that plugs will enter receptacles, vehicle connectors will enter vehicle inlets, and breakaway couplings will mate in the intended manner.

11.6 Uninsulated live parts shall be secured in place so that a reduction in the clearances and creepage distances below those required in 12.1 and 12.2 is not allowed.

Single User - Hard Copy If Purchased by Beuth Verlag From SAI Global - ILI Publishing on 6/16/2014 8:38:39 AM || ALL RIGHTS RESERVED

UL COPYRIGHTED MATERIAL –
NOT AUTHORIZED FOR FURTHER REPRODUCTION OR
DISTRIBUTION WITHOUT PERMISSION FROM UL

11.7 A current-carrying part shall be prevented from turning relative to the surface on which it is mounted if such turning would adversely affect the performance of the device.

12 Clearances and Creepage Distances

12.1 Except as noted in 12.2, the clearances and creepage distances between field wiring terminals of opposite polarity, and the clearances and creepage distances between a field wiring terminal and any other uninsulated metal part (dead or live) not of the same polarity, shall not be less than 6.4 mm (1/4 inch).

12.2 If the field wiring terminals mentioned in 12.1 are intended for solder connections only, using solid or tinned stranded wire, the clearances and creepage distances between the terminals shall be as specified in Annex A, Ref. No. 21. See 56.10.2.

12.3 In all circuits other than at field wiring terminals, the acceptability of the clearances and creepage distances between an uninsulated live part and any other uninsulated metal part (dead or live) not of the same polarity shall be as specified in Annex A, Ref. No. 21.

12.4 The dead metal mentioned in 12.3 includes a metal surface (a metal face plate in the case of a flush receptacle) on which the device is mounted in the intended manner. A dead-metal screw head, rivet, or the like is not considered to be exposed to contact by persons after the device is installed in the intended manner, if it is located in a hole so that the dead metal cannot be contacted by the probe illustrated in Figure 1.

12.5 Clearances and creepage distances shall be measured in accordance with Annex A, Ref. No. 21. In determining the pollution degree and overvoltage category, the end-use application shall be considered and may modify those characteristics given in 12.8 and 12.9.

12.6 Clearances and creepage distances shall be measured in all conditions of use, both with and without mating devices of the intended configuration installed and any movable parts displaced to the position of a minimum spacing.

12.7 The clearances and creepage distances required in 12.1 shall be measured through air and over insulating and conductive surfaces with the device wired as intended with the maximum anticipated conductor size. They shall be measured from any point on the terminal that is able to contact the clamped conductor as in the case of a wire-binding-screw terminal, or from any point on the perimeter of an opening to receive a conductor in the case of an enclosed terminal.

12.8 The level of pollution expected or controlled for indoor use equipment shall be pollution degree 3. For outdoor use equipment, pollution degree 4 is expected, unless protection is afforded by a suitable enclosure appropriate for the installation in which case a lower pollution degree is capable of being achieved. The interior of equipment with enclosure types 3, 3S, 4, 4X, 6 and 6P or Marine type shall be considered pollution degree 3. Hermetically sealed or encapsulated enclosures shall be considered pollution degree 1.

12.9 Devices covered by this Standard shall be rated overvoltage Category II as defined in Annex A, Ref No. 21.

Single User - Hard Copy || Purchased by Beuth Verlag From SAI Global - ILI Publishing on 6/10/2014 8:38:39 AM || ALL RIGHTS RESERVED

UL COPYRIGHTED MATERIAL –
NOT AUTHORIZED FOR FURTHER REPRODUCTION OR
DISTRIBUTION WITHOUT PERMISSION FROM UL

13 Accessibility of Live Parts

13.1 To reduce the likelihood of unintentional contact that could involve a risk of electric shock from uninsulated live parts, a live part shall not be contacted by the probe illustrated in Figure 1. See 13.5.

Single User - Hard Copy || Purchased by Beuth Verlag From SAI Global - ILI Publishing on 6/16/2014 8:38:39 AM || ALL RIGHTS RESERVED

UL COPYRIGHTED MATERIAL –
NOT AUTHORIZED FOR FURTHER REPRODUCTION OR
DISTRIBUTION WITHOUT PERMISSION FROM UL

Figure 1
Articulate probe with web stop

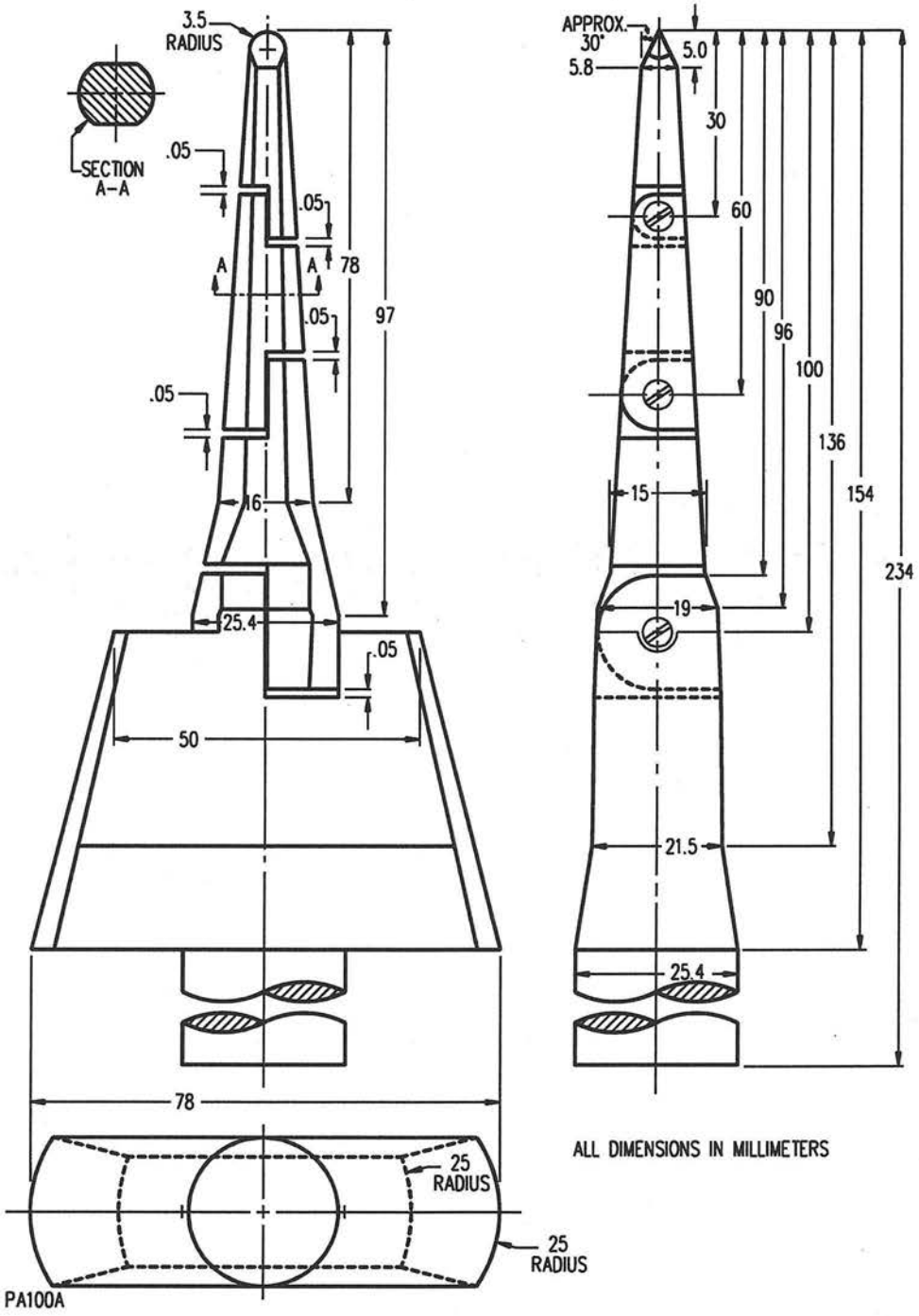

UL COPYRIGHTED MATERIAL –
NOT AUTHORIZED FOR FURTHER REPRODUCTION OR
DISTRIBUTION WITHOUT PERMISSION FROM UL

Single User - Hard Copy || Purchased by Benth Verlag From SAI Global - ILI Publishing on 6/10/2014 8:38:39 AM || ALL RIGHTS RESERVED

13.2 The probe illustrated in Figure 1 shall be applied to any depth that the recessing will permit; and shall be rotated, changed in configuration or angled before, during, and after application to any position that is necessary to examine the device.

13.3 The probe mentioned in 13.1 shall be used as a measuring instrument to judge the accessibility provided by the recessing and not as an instrument to judge the strength of a material; it shall be applied with a 13.3 N (3 lbf) force to determine accessibility.

13.4 During the examination of a product to determine whether it complies with the requirements in 13.1, the device shall be wired and assembled in accordance with the manufacturer's instructions. Any other part that is able to be opened or removed by the user without using a tool shall be opened or removed.

13.5 Mating devices shall not have exposed live contacts when fully mated or during engagement or withdrawal. Mating devices provided with a shroud to cover the contacts shall be examined to determine that the shroud enters the mating device before the contacts become energized.

13.6 Compliance with 13.5 shall be determined with the use of the probe shown in Figure 1 in every possible position. See 13.2.

14 Grounding

14.1 A device intended for use on a grounded system shall be of a grounding type and shall have a separate contact for interconnection of the equipment grounding conductor. A device intended for use on an isolated system shall comply with Isolation, 16, and this Clause shall not apply to that type of device.

14.2 Except as noted in 14.3 and 14.4, the equipment grounding terminal or lead and its corresponding pin or contact of a male device intended for permanent installation shall be conductively connected to the mounting means, housing, hood, enclosure, or other dead metal parts of a device that can come into contact with the equipment or vehicle enclosure.

14.3 The conductive connection need not be provided if the mounting means, housing, hood, or shell is constructed of an insulating material and the lack of ground continuity to the equipment enclosure is readily apparent.

14.4 In Mexico and the US, the conductive connection need not be provided if the device is marked in accordance with 56.3.1. In Canada, this does not apply.

14.5 A metal shell of a device that is used as the grounding contact member shall be as follows:

a) The surface of the shell that is depended upon for grounding continuity shall not be painted or otherwise subjected to conditions that could result in loss of grounding continuity;

b) One or more separate spring type components are incorporated to provide grounding path continuity;

c) The components are protected against damage; and

d) The shell complies with the requirements of the Grounding Path Current Test, 38.

Single User - Hard Copy || Purchased by Beuth Verlag From SAI Global - ILI Publishing on 6/16/2014 6:38:39 AM || ALL RIGHTS RESERVED

UL COPYRIGHTED MATERIAL –
NOT AUTHORIZED FOR FURTHER REPRODUCTION OR
DISTRIBUTION WITHOUT PERMISSION FROM UL

14.6 The grounding contact shall be located and formed so that the path of electrical continuity to the grounding contact of the plug or vehicle connector and its mating device, or between halves of a breakaway coupling, is completed before continuity is established between any other contact and its respective contact on the mating device.

14.7 The grounding contact path, except for the metal housing or mounting, shall be of copper or a copper alloy or equivalent material. If a metal housing is a part of the primary equipment grounding path, it shall not be of zinc or a zinc-based alloy.

14.8 A copper-based alloy rivet which is used to hold parts together in the grounding-contact path or forms a part of the grounding path shall contain not less than 80 percent copper.

14.9 A connection in the grounding-contact path shall be secured by riveting, bolting, welding, or by an equivalent mechanical means of securement, capable of complying with the requirements of the Grounding Path Current Test, 38.

14.10 In mating devices provided with an equipment-grounding contact, the grounding contact shall not be capable of touching a line-side phase contact, independent of any polarization feature of the enclosure. Such devices shall comply with the requirements of the Polarization Integrity Test, 49.

14.11 All exposed non-current-carrying metal parts of a device that are likely to become energized shall be conductively connected to the equipment ground.

14.12 Grounding and other dead metal parts shall be secured in place so that a reduction in spacings below those required in 12.1 is not allowed.

15 Grounding Connections

15.1 The grounding conductors of a device shall be sized as indicated in Table 3, but shall not be required to be larger than the circuit conductors providing power to the vehicle.

Table 3
Minimum acceptable sizes of grounding conductors

Device rating, amperes (Not exceeding)	Copper grounding conductors[a,b,c]	
	AWG	mm^2
15	14	2.08
20	12[b]	3.31
30	10	5.26
40	10	5.26
60	10	5.26
100	8	8.37
200	6	13.3
300	4	21.2
400	3	26.7
500	2	33.6
600	1	42.4
800	1/0	53.5

[a]In Mexico, the metric cross-sectional area is mandatory. In Canada and the US, the metric cross-sectional area is optional.

[b]In Canada, the minimum acceptable sizes of grounding conductors are 14 AWG for 20A rated devices and 12 AWG for 30A rated devices. In Mexico and the US, the requirements of the table apply.

UL COPYRIGHTED MATERIAL –
NOT AUTHORIZED FOR FURTHER REPRODUCTION OR
DISTRIBUTION WITHOUT PERMISSION FROM UL

Table 3 Continued on Next Page

Single User - Hard Copy || Purchased by Beuth Verlag From SAI Global - ILI Publishing on 6/10/2014 8:38:39 AM || ALL RIGHTS RESERVED

Table 3 Continued

Device rating, amperes (Not exceeding)	Copper grounding conductors[a,b,c]	
	AWG	mm^2
[c]In Canada, the terminals of a device intended to accommodate 8 AWG or larger conductor shall also be capable of securing a compact copper stranded construction. In Mexico and the US, the requirements of the table apply.		

15.2 An integral grounding lead shall not be shorter than 152 mm (6 inches).

15.3 A terminal provided for the field connection of a grounding conductor shall:

a) Employ a mechanical clamping means that does not depend upon solder for the connection of the wire, and

b) Be capable of securing a conductor of the minimum size indicated in Table 3.

16 Isolation

16.1 A device intended for use on an isolated system shall comply with 16.2. A device intended for use on a grounded system need not comply with these requirements, but rather shall comply with Grounding, 14.

16.2 No protective earth ground is required. A functional earth, or reference earth, conductor used to monitor the isolation of the vehicle frame from the source voltage is required. The conductor shall be suitably sized for the application.

17 Terminal Parts

17.1 Devices shall be provided with suitable terminals or leads for the connection of conductors having an ampacity not less than the current rating for which they are intended in accordance with Annex A, Ref. No. 1. See 56.1.2 – 56.1.4.

17.2 Pressure wire and set screw terminals used with single or multipole conductors shall comply with the applicable requirements in Annex A, Ref. No. 12.

In Canada, the terminals of a device intended to accommodate 8 AWG or larger for permanently mounted inlet and receptacles, shall comply with the requirements of Annex A, Ref. No. 12. In Mexico and the US, this gauge restriction does not apply.

17.3 A terminal plate that has a tapped hole for a soldering lug or pressure-wire connector shall be at least 1.27 mm (0.050 inch) thick and shall not have fewer than two full threads in the metal for a terminal screw.

17.4 Wiring terminals of a receptacle or vehicle inlet shall be located or protected so they are not likely to be forced against the wiring in the terminal box or compartment during installation.

UL COPYRIGHTED MATERIAL –
NOT AUTHORIZED FOR FURTHER REPRODUCTION OR
DISTRIBUTION WITHOUT PERMISSION FROM UL

Single User - Hard Copy Purchased by Beatty Verlag From SAI Global - IHS Publishing on 6/19/2014 8:38:39 AM || ALL RIGHTS RESERVED

17.5 Crimp type terminals can be provided with an inspection hole at the end of the crimp well to assure the full insertion of the conductor. Devices with crimp terminals shall be installed in accordance with the manufacturer's recommendations and be used with stranded conductors only.

17.6 Wire binding screws used in making electrical connections shall not be smaller than indicated in Table 4. Wiring terminal screws shall have no fewer than two threads of engagement into metal.

Table 4
Minimum sizes of wire binding screws

Contact rating, amperes	Minimum size of screw	Minimum head diameter[a]	Maximum number of threads per inch (per 25.4 mm)
20 or less	#6[a]	7.0 mm (0.275 in)	36
20 or less	M3.5[a]	7.0 mm	–
up to 35	#8[b]	8.0 mm (0.315 in)	32
up to 35	M4[b]	8.0 mm	–

[a] An M3 (No. 6) terminal screw, minimum head diameter 6.3 mm (1/4 inch), may be used on devices not intended for permanent installation and rated at 15 A.

[b] A (No. 8) or larger screw having more than the number of threads per inch indicated may be used for terminals if the assembly is capable of withstanding a tightening torque of 1.8 N•m (16 lbf in) applied to the wire-binding screw without stripping either the screw threads or the terminal plate threads, or damaging the slot in the head of the screw. See 17.7.

17.7 A binding screw that has 32 or more threads per inch (per 25.4 mm) with a terminal plate formed from stock 0.76 mm (0.030 inch) thick can have the metal extruded at the tapped hole to provide two full threads for the binding screw.

17.8 The terminals of a device intended to accommodate 8 AWG or larger wire shall comply with the applicable requirements in Annex A, Ref. No. 12.

17.9 The tightening torque for the field wiring terminals of the devices mentioned in 17.3 and 17.8 shall be specified by the device manufacturer and shall be marked as described in 56.10.1. The specified tightening torque shall not be less than 90 percent of the value employed in the static heating test in Annex A, Ref. No. 12, for the maximum wire size corresponding to the ampere rating of the device. A lesser torque value is able to be assigned if the terminal is investigated in accordance with Annex A, Ref. No. 10 or Annex A, Ref. No. 12 using the lesser assigned torque value.

17.10 Terminal parts that are able to carry current and that can come into contact with branch circuit conductors other than the grounding conductor shall not have a coating of zinc or cadmium.

18 Contacts

18.1 Contacts shall be made of gold, silver, copper, an alloy of these metals, or equivalent material.

18.2 A device shall have protection for exposed live contacts and terminals, when assembled as intended.

19 Assembly

19.1 A device incorporating two or more pieces shall be of such design that any intended grounding contact polarization will not be defeated by improper assembly during installation.

UL COPYRIGHTED MATERIAL –
NOT AUTHORIZED FOR FURTHER REPRODUCTION OR
DISTRIBUTION WITHOUT PERMISSION FROM UL

Single User - Hard Copy || Purchased by Beuth Verlag From SAI Global - ILI Publishing on 8/16/2014 8:38:39 AM || ALL RIGHTS RESERVED

19.2 Screws upon which the permanent assembly of a device depends shall not loosen under normal use.

19.3 A sealing compound, if used, and in contact with live parts, shall be of an insulating, waterproof material that will not melt or flow at a temperature lower than the temperature rating of the conductors intended to be wired to a device.

20 Separation of Circuits

20.1 Factory wiring

20.1.1 Except as noted in 20.1.2, insulated conductors of different circuits, see 20.1.3, within a unit, including wires in a terminal box or compartment, shall be either separated by barriers or segregated and shall be so separated or segregated from uninsulated live parts connected to different circuits.

20.1.2 For insulated conductors of different circuits, if each conductor is provided with insulation acceptable for the highest of the circuit voltages, no barriers or segregation is necessary.

20.1.3 For the purpose of the requirement in 20.1.1, different circuits include:

a) AC power circuits and ground,

b) DC power circuits and ground,

c) AC power circuits and communication circuits (control pilot, proximity detect, etc.),

d) DC power circuits and communication circuits (control pilot, proximity detect, etc.), and

e) AC power circuits and DC power circuits.

20.1.4 Segregation of insulated conductors can be accomplished by clamping, routing, or an equivalent means that will maintain permanent separation from insulated and uninsulated live parts and from conductors of a different circuit.

20.2 Separation barriers

20.2.1 A barrier used to provide separation between the wiring of different circuits shall be grounded metal or insulating material complying with the requirements for flammability classification of internal materials specified in 8.1, and no less than 0.71 mm (0.028 inch) thick, and supported so that it cannot be readily deformed so as to defeat its purpose.

20.2.2 A barrier used to provide separation between field wiring of one circuit and field or factory wiring or uninsulated live parts of another circuit shall be spaced no more than 1.6 mm (1/16 inch) from the enclosure walls and interior mechanisms, component-mounted panels, and other parts that serve to provide separated compartments.

Single User - Hard Copy || Purchased by Beuth Verlag From SAI Global - ILI Publishing on 8/10/2014 8:38:39 AM || ALL RIGHTS RESERVED

UL COPYRIGHTED MATERIAL –
NOT AUTHORIZED FOR FURTHER REPRODUCTION OR
DISTRIBUTION WITHOUT PERMISSION FROM UL

20.3 Field wiring

20.3.1 The equipment shall be constructed so that a field-installed conductor of a circuit shall be separated as specified in 20.3.2 or separated by barriers as specified in 20.2.1 and 20.2.2 from:

a) Factory-installed conductors connected to any other circuit, unless the conductors of both circuits will be insulated for the maximum voltage of either circuit.

b) An uninsulated live part of another circuit and from an uninsulated live part if short circuit with it could result in a risk of fire, electric shock, electrical energy involving high current levels, or injury to persons.

c) Field-installed conductors connected to any other circuit unless both circuits are Class 2 or Class 3 or both circuits are other than Class 2 or Class 3 and both circuits will be insulated for the maximum voltage of either circuit.

d) Field wiring terminals of other circuits, unless the field wiring will be insulated for the maximum voltage of either circuit and both circuits are Class 2 or both circuits are other than Class 2.

In Mexico and the US, items (c) and (d) also include Class 3 circuits. In Canada, Class 3 circuits do not apply.

20.3.2 Separation of a field-installed conductor from another field-installed conductor and from an uninsulated live part connected to another circuit is capable of being accomplished by locating an opening in the enclosure for the conductor opposite to the conductor terminal so that, when the installation is complete, the conductors and parts of different circuits are separated by a minimum of 6.4 mm (1/4 inch). In determining whether a unit having such openings complies with this requirement, it shall be wired as in service, including 152.4 mm (6 inches) of slack in each conductor within the enclosure. No more than average care shall be exercised in routing the wiring and stowing the conductor slack into the wiring compartment.

20.3.3 With reference to 20.3.2, if the number of openings in the enclosure does not exceed the minimum required for the proper wiring of the unit, and if each opening is located opposite a set of terminals, it shall be assumed that a conductor entering an opening will be connected to the terminal opposite that opening. If more than the minimum number of openings are provided, the possibility of a conductor entering an opening other than the one opposite the terminal to which it is intended to be connected, and the likelihood of it contacting insulated conductors or uninsulated current-carrying parts connected to a different circuit, shall be investigated.

21 Devices Intended to Accommodate a Fuse

21.1 Devices shall be constructed so that they will accommodate an enclosed fuse or fuses having a voltage rating not less than the voltage rating of the device.

21.2 The arrangement for holding the fuse shall comply with the requirements in Annex A, Ref. No. 22, as applicable.

Single User - Hard Copy || Purchased by Beuth Verlag From SAI Global - ILI Publishing on 8/16/2014 8:38:39 AM || ALL RIGHTS RESERVED

UL COPYRIGHTED MATERIAL –
NOT AUTHORIZED FOR FURTHER REPRODUCTION OR
DISTRIBUTION WITHOUT PERMISSION FROM UL

21.3 A device shall include provision for a fuse in each ungrounded conductor, but there shall not be any provision for a fuse in any other conductor.

21.4 The removal or replacement of a fuse shall not expose any live parts in a device to personal contact.

21.5 The construction of a device shall be such that the fuse(s) will not be removable when the device is engaged with a mating device.

21.6 An enclosure shall be provided for the fuse or fuses in a device intended to accommodate such components. Compliance with all of the following shall be determined. An enclosure:

a) Shall be of a moisture-resistant material in accordance with the Moisture Absorption Resistance Test, 27.

1) Fiber and similar absorptive materials shall not be considered as having moisture-absorptive properties acceptable for use as the enclosure of a fuse.

2) Molded phenolic and similar thermosetting polymeric materials shall be considered as having moisture-absorptive properties acceptable for use as the enclosure of a fuse.

b) Shall reduce the likelihood of persons unintentionally contacting uninsulated live parts of the fuse and fuse holder.

c) Shall confine the effects of a fuse rupture to the interior of the enclosure.

d) Shall comply with the requirements for insulating materials in 8.1.3, 8.2.1, and 8.3.1.

21.7 Polymeric materials used as the enclosure of a fuse shall have a flame class rating of V-0, V-1, V-2, 5VA, or 5VB in accordance with Annex A, Ref. No. 17.

22 Cable Grip

22.1 Except as noted in 22.2, a cable grip shall be provided that:

a) Permits the electric vehicle cable to be readily replaced, unless the cable grip is a molded-on device; and

b) Does not permit a strain to be transmitted to the conductor connections within the terminal enclosure.

22.2 Devices provided with a suitable flexible conduit adapter or threaded inlet need not comply with the requirement in 22.1.

22.3 If the cable grip is threaded to the enclosure, it shall form a tight engagement. When assembled in the intended manner, the cable entry shall not turn or loosen. The grip and cable entry shall be smooth and free from sharp edges that are able to damage the jacket of the electric vehicle cable.

Single User - Hard Copy Is Purchased by Saudi Varied From SAI Global - ILI Publishing on 6/10/2014 8:38:39 AM || ALL RIGHTS RESERVED

UL COPYRIGHTED MATERIAL –
NOT AUTHORIZED FOR FURTHER REPRODUCTION OR
DISTRIBUTION WITHOUT PERMISSION FROM UL

22.4 The cable grip shall comply with the Cable Secureness Test in 33.

23 Sharp Edges

23.1 An enclosure, a frame, a guard, a handle, or the like shall not be sufficiently sharp to constitute a risk of injury to persons in normal maintenance and use.

23.2 Whenever referee measurements are necessary to determine that a part as mentioned in 23.1 is not sufficiently sharp to constitute a risk of injury to persons, the method described in Annex A, Ref. No. 23, shall be employed.

PERFORMANCE

24 Representative Devices

24.1 Prior to initial electrical testing, all devices shall be tightened in accordance with the manufacturer's instructions. Testing with the use of a 60 Hz supply voltage is considered to represent testing with the use of a higher frequency supply voltage not exceeding 400 Hz. A 60 Hz test current shall be considered to represent a 50 Hz rating.

24.2 Unless stated otherwise, the test potential of a test circuit shall be not less than the test potential in volts corresponding to the voltage rating of devices as indicated in Table 5.

Table 5
Voltage for tests

Voltage rating of device[a]	Test potential in volts
110 – 120, ac	120, ac
110 – 125, dc	125, dc
208, ac	208, ac
220 – 240, ac	240, ac
220 – 250, dc	250, dc
265 – 277, ac	277, ac
440 – 480, ac	480, ac
550 – 600, ac	600, ac
550 – 600, dc	600, dc

[a] If the rating of the device does not fall within any of the indicated voltage ranges, it shall be tested at its rated voltage.

24.3 The total number of representative devices for testing to determine compliance may be reduced if certain tests are repeated on previously tested representative devices when:

a) The test is capable of being repeated using different portions of a previously tested device, and

UL COPYRIGHTED MATERIAL –
NOT AUTHORIZED FOR FURTHER REPRODUCTION OR
DISTRIBUTION WITHOUT PERMISSION FROM UL

Single User - Hard Copy Is Purchased by Beijing Verbg From SAI Global - ILI Publishing on 6/10/2014 8:38:36 AM | ALL RIGHTS RESERVED

b) Agreeable to all parties concerned.

24.4 Devices shall be subjected to the appropriate tests outlined in Table 6.

Table 6
Electric vehicle coupler test sequence

Test	Reference	Plugs	Vehicle Connectors	Receptacles	Vehicle Inlets	Breakaway Couplings[l]
Accelerated Aging Test[a, j]	25	X	X	X	X	X
Ultraviolet Light Exposure[a, b]	Annex A, Ref. No. 20	X	X	X	X	X
Comparative Tracking Index Test[b]	Annex A, Ref. No. 18	X	X	X	X	X
Glow Wire Test[b]	Annex A, Ref. No. 18	X	X	X	X	X
High-Current Art Resistance to Ignition Test[b]	Annex A, Ref. No. 18	X	X	X	X	X
Mold Stress Relief Test[a]	26	X	X	X	X	X
Water Exposure and Immersion[b]	Annex A, Ref. No. 20	X	X	X	X	X
Moisture Absorption Resistance[a, b]	27	X	X	X	X	X
Humidity Conditioning[c]	28	X	X	X	X	X
Insulation Resistance Test[c]	29	X	X	X	X	X
Dielectric Withstand Test[c]	30	X	X	X	X	X
Dew Point Test[a]	31	X	X	X	X	X
Conductor Secureness Test[a]	32	X	X			X
Cable Secureness Test[a]	33	X	X			X
Impact Test[a]	34	X	X			X
Crush Test[a]	35	X	X			X
Vehicle Driveover Test[a]	36	X	X			X
Withdrawal Force Test[a]	37	X	X			X
Ground Path Current Test[a, e]	38	X	X	X	X	X
Short Circuit Test[a, h]	39	X	X	X	X	
Strength of Insulating Base and Support Test[a]	40			X	X	
No-Load Endurance Test[a, h]	41	X	X	X	X	X
Endurance with Load Test[a, g]	42	X	X	X	X	X
Overload Test[a, g]	43	X	X	X	X	X
Electromagnetic Test	44	X	X	X	X	X
Temperature Rise Test[a, g]	45	X	X	X	X	X
Fuseholder Temperature Test[a]	46	X	X	X	X	X
Surface Temperatures[a]	47	X	X	X	X	X
Resistance to Arcing Test[g]	48		X	X		X
Polarization Integrity Test[h]	49	X	X	X	X	X
Resistance to Corrosion Test[a]	50	X	X	X	X	X
Vibration Test[a]	51				X	
Accelerated Aging Gasket Test[a]	52	X	X	X	X	X
Permanence of Marking Test[k]	53	X	X			X
Enclosure Tests for Environmental Protection[i]	54	X	X	X	X	X

[a] Each of these tests shall be performed on a separate device.

UL COPYRIGHTED MATERIAL –
NOT AUTHORIZED FOR FURTHER REPRODUCTION OR
DISTRIBUTION WITHOUT PERMISSION FROM UL

Table 6 Continued on Next Page

Single User - Hard Copy || Purchased by Beuth Verlag From SAI Global - ILI Publishing on 6/16/2014 8:38:39 AM || ALL RIGHTS RESERVED

Table 6 Continued

Test	Reference	Plugs	Vehicle Connectors	Receptacles	Vehicle Inlets	Breakaway Couplings[l]
[b] Based on properties of insulating materials. See construction requirements.						
[c] After Humidity Conditioning, insulation resistance and dielectric strength tests shall be performed on the same device.						
[d] Factory-wired devices only.						
[e] Required for specific grounding constructions only. Refer to test description.						
[f] These tests are performed alternately on the same device.						
[g] For devices intended for current interruption only, the overload, temperature rise and resistance to arcing tests shall be performed on the same device.						
[h] Mated pairs shall be provided.						
[i] For device enclosures identified by a Type number or numbers for environmental protection.						
[j] Pliable rubber or pliable vinyl chloride elastomeric devices only.						
[k] Performed on hang tag markings if provided.						
[l] For breakaway couplings, all tests indicated are required to be performed on a mated pair or on both halves of the coupling.						

25 Accelerated Aging Tests

25.1 Rubber compounds

25.1.1 Each of three devices with a molded-rubber component shall not show any apparent deterioration of the rubber compound and no greater change in hardness of the rubber compound than ten numbers as the result of exposure for 70 hours in a full-draft circulating-air oven at a temperature of 100 ±1.0°C (212.0 ±1.8°F).

25.1.2 If possible, the molded rubber device shall be used complete. The hardness of the rubber shall be determined as the average of five readings with an appropriate gauge, such as the Rex hardness gauge or the Shore durometer. The device shall be allowed to rest at 23 ± 2°C (74 ± 4°F) for four or more hours after removal from the oven. The hardness shall be determined again as the average of five readings. The difference between the average original hardness reading and the average reading taken after exposure to the heat conditioning is the change in hardness.

25.1.3 The accelerated-aging tests mentioned in 25.1.1 and 25.1.2 shall be made on each color of rubber and on each basic rubber compound employed for the device.

Single User - Hard Copy || Purchased by Beuth Verlag From SAI Global - ULI Publishing on 6/16/2014 8:38:39 AM || ALL RIGHTS RESERVED

UL COPYRIGHTED MATERIAL –
NOT AUTHORIZED FOR FURTHER REPRODUCTION OR
DISTRIBUTION WITHOUT PERMISSION FROM UL

25.2 PVC compounds

25.2.1 Each of three devices having a body of molded plasticized polyvinyl chloride or a copolymer thereof shall not show any cracks, discoloration, or other visible signs of deterioration as the result of exposure for 96 hours in a full-draft circulating-air oven at a temperature of 100.0 ±1.0°C (212.0 ±1.8°F).

26 Mold Stress Relief Test

26.1 Except as noted in 26.2, as a result of temperature conditioning specified in 26.3, there shall not be any warping, shrinkage or other distortion that results in any of the following:

a) Making uninsulated live parts, other than exposed wiring terminals, or internal wiring accessible to contact by the probe illustrated in Figure 1. See 13.2.

b) Defeating the integrity of the enclosure so that acceptable mechanical protection is not afforded to the internal parts of the device.

c) Interference with the operation, function, or installation of the device.

d) A condition that results in the device not complying with the strain relief requirements, if applicable.

e) A reduction of spacings between uninsulated live parts of opposite polarity, uninsulated live parts, and accessible dead or grounded metal below the minimum acceptable values.

f) Any other evidence of damage that could increase the risk of fire or electric shock.

26.2 Devices employing only thermosetting materials need not be subjected to this test.

26.3 Three devices shall be placed in a circulating air oven maintained at a temperature of at least 10°C (18°F) higher than the maximum temperature of the device measured during the temperature test described in the Temperature Rise Test, 45, but not less than 80°C (176°F). The devices shall remain in the oven for 7 hours. The devices shall be removed from the oven and allowed to cool to room temperature before determining compliance.

26.4 Immediately following the completion of this test, the devices shall be subjected to a repeated dielectric voltage withstand test as described in the Dielectric Withstand Test, 30.

27 Moisture Absorption Resistance

27.1 Except as noted in 27.4, moisture-resistant insulating materials shall not absorb more than 6 percent of water by mass.

27.2 The material shall be:

a) Dried at 105 ±5°C (221 ±9°F) for 1 hour,

b) Weighed (W_1),

c) Immersed in distilled water at 23 ±1°C (73 ±1.8°F) for 24 hours,

d) Removed from the distilled water and the excess surface moisture wiped off, and

UL COPYRIGHTED MATERIAL –
NOT AUTHORIZED FOR FURTHER REPRODUCTION OR
DISTRIBUTION WITHOUT PERMISSION FROM UL

Single User - Hard Copy || Purchased by Beuth Verlag From SAI Global - ILI Publishing on 6/10/2014 8:38:39 AM || ALL RIGHTS RESERVED

e) Reweighed (W_2).

27.3 The moisture absorbed by the material shall be calculated as:

$$\frac{W_2 - W_1}{W_1} \times 100\%$$

27.4 A material tested in accordance with the Method for Measuring Water Absorption of Polymeric Materials (ASTM D 570) described in Annex A, Ref. No. 18, need not be subject to the test requirements in 27.1 – 27.3.

28 Humidity Conditioning

28.1 Equipment shall not be adversely affected by humid conditions which can occur in anticipated use.

28.2 Compliance is checked by the humidity conditioning described herein, followed immediately by the measurement of the insulation resistance and by the dielectric withstand test specified in 29 and 30. Cable entries, if any, are left open. If knock-outs are provided, one of them shall be opened.

28.3 Each of two previously untested devices shall be used for this test. The devices shall be mated with their respective mating devices.

28.4 The devices shall be placed into an environmental chamber maintained at a relative humidity of 93 ±2 percent, and at a temperature (t) of 32 ±2.0°C (89.6 ±3.6°F).

28.5 Before being placed in the humidity cabinet, the devices shall be brought to a temperature between t and t + 4°C. In most cases, the devices can be brought to the temperature specified by keeping them at this temperature for at least 4 hours before the humidity treatment.

28.6 The devices shall be kept in the cabinet for:

a) 2 days (48 hours) for equipment intended for use indoors only, and

b) 7 days (168 hours) for equipment intended for outdoor use.

28.7 A relative humidity between 91 and 95 percent is capable of being obtained by placing in the humidity cabinet a saturated solution of sodium sulphate (Na_2SO_4) or potassium nitrate (KNO_3) in water, having a sufficiently large contact surface with the air.

28.8 In order to achieve the specified conditions within the cabinet, it is necessary to ensure constant circulation of the air within and, in general, to use a cabinet which is thermally insulated.

Single User - Hard Copy || Purchased by Beuth Verlag From SAI Global - ILI Publishing on 6/16/2014 8:30:39 AM || ALL RIGHTS RESERVED

UL COPYRIGHTED MATERIAL –
NOT AUTHORIZED FOR FURTHER REPRODUCTION OR
DISTRIBUTION WITHOUT PERMISSION FROM UL

28.9 After this conditioning, the two devices shall be subjected to the Insulation Resistance Test, 29, and the Dielectric Withstand Test, 30.

29 Insulation Resistance Test

29.1 The insulation resistance of the two devices after the conditioning as indicated in Humidity Conditioning, 28, shall not be less than 5 megohms.

29.2 Compliance shall be checked by the tests made immediately after the humidity test in the humidity cabinet or in the room in which the devices were brought to the prescribed temperature, after reassembly of covers which were removed.

29.3 Devices employing thermoplastic material shall be subjected to the mating test described in 30.5.

29.4 For the purpose of these tests, the neutral contact and pilot contacts are each considered as a pole.

29.5 The insulation resistance shall be measured with a dc voltage of approximately 500 V applied, the measurement being made 1 minute after application of the voltage.

29.6 For receptacles and plugs, the measurement shall be made with and without a plug in engagement. For vehicle connectors and vehicle inlets, the measurement shall be made with and without the vehicle inlet in engagement. For breakaway couplings, the measurement shall be made with the coupling mated and unmated. In each case, the insulation resistance shall be measured consecutively:

a) Between all poles connected together and the body;

b) Between each pole in turn and all others, these being connected to the body, with devices in engagement; and

c) Between any metal enclosure and metal foil in contact with the inner surface of its insulating lining, if any, a gap of approximately 3.8 mm (0.15 inch) being left between the metal foil and the edge of the lining.

29.7 The term "body" includes all accessible metal parts, metal foil in contact with the outer surface of external parts of insulating material, other than the engagement face of devices, fixing screws of bases, enclosures and covers, external assembly screws, and grounding terminals, if any.

30 Dielectric Withstand Test

30.1 For receptacles or vehicle inlets, the devices shall withstand without breakdown a 50 – 60 Hz essentially sinusoidal potential applied in accordance with Table 7 for one minute between:

a) Live parts of opposite polarity;

b) Live parts, including secondary circuits, and ground; and

c) Secondary circuits and live parts;

immediately following Humidity Conditioning, 28, and the Insulation Resistance Test, 29.

Single User - Hard Copy Purchased by Beam Verlag From SAI Global - ILI Publishing on 6/16/2014 8:38:39 AM || ALL RIGHTS RESERVED

UL COPYRIGHTED MATERIAL –
NOT AUTHORIZED FOR FURTHER REPRODUCTION OR
DISTRIBUTION WITHOUT PERMISSION FROM UL

Table 7
Dielectric withstand test voltage

Device rating, volts	Test voltage, volts
Up to and including 50	500
Over 50 up to and including 300	2000
Over 300 up to and including 600	3000

30.2 Each of the two devices utilized in the Insulation Resistance Test, 29, shall be tested by means of a 500 VA or larger capacity transformer whose output voltage is essentially sinusoidal and is capable of being varied. The applied potential shall be increased from zero until the required test level is reached, and shall be held at that level for one minute. The increase in the applied potential shall be at a uniform rate and as rapid as is consistent with its value being correctly indicated by a voltmeter.

30.3 If the output of the test-equipment transformer is less than 500 volt-amperes, the equipment shall include a voltmeter in the output circuit to indicate the test potential directly.

30.4 For plugs, vehicle connectors, or breakaway couplings, the devices shall be capable of withstanding the application of an ac potential of 1000 V plus 2 times the rated voltage applied for a period of one minute between live parts of opposite polarity and between live parts and grounding or dead metal parts.

30.5 Immediately after the test, it shall be possible to engage mating devices, any of which are made of thermoplastic materials. It shall be impossible to mate the devices with their respective mating device in any but the correct polarization. There shall not be any deformation that results in the exposure of live parts, or to the extent affecting the intended and proper functioning of the device.

31 Dew Point Test

31.1 Each of three devices shall comply with the Dielectric Withstand Test, 30, after being conditioned as described in 31.2 and 31.3.

31.2 The device shall be conditioned in a cold chamber at 5.0 ±2.0°C (41.0 ±3.6°F) for at least 4 hours, and then transferred from the cold chamber to a humidity chamber at a relative humidity of 93 ±2 percent and 32.0 ±2.0°C (89.6 ±3.6°F). The transfer time shall not exceed 1 minute.

31.3 The Dielectric Withstand Test shall be performed 1 minute after the device is transferred to the humidity chamber.

31.4 If part or all of the exposed surfaces of a device is of material other than metal, then a rectangular piece of metal foil measuring 100 by 200 mm (4 by 8 inches) shall be placed on the surface of the product so that all of the foil is in contact with the surface of the device. In each case, the foil shall be placed anywhere on the product that is accessible.

32 Conductor Secureness and Pullout Test

32.1 If a conductor, 20 AWG (0.52 mm^2) or larger, of an electric vehicle, cable, or wiring assembly is to be connected to an element (male or female contact) of a device before the element has been assembled into the device, the connection shall not break or loosen under a pull applied for 1 minute between the element and the conductor before the element has been assembled into the device.

UL COPYRIGHTED MATERIAL –
NOT AUTHORIZED FOR FURTHER REPRODUCTION OR
DISTRIBUTION WITHOUT PERMISSION FROM UL

Single User - Hard Copy || Purchased by Beuth Verlag From SAI Global - IHS Publishing on 8/16/2014 8:36:39 AM || ALL RIGHTS RESERVED

32.2 While the test mentioned in 32.1 is being performed, the angle between the element and the conductor shall be that used in the completely assembled device. The pullout force as specified in Table 8 shall be applied gradually.

Table 8
Test values for conductor secureness test

Size of conductor		Pullout force	
AWG or kcmil	mm^2	N	pounds
30	0.05	2.2	0.5
28	0.08	4.5	1
26	0.13	8.9	2
24	0.205	13.4	3
22	0.325	20	4.5
20	0.519	30	6.75
18	0.824	30	6.75
16	1.31	40	9
14	2.08	50	11.5
12	3.31	60	13.5
10	5.26	80	18.0
8	8.37	90	20.5
6	13.3	94	21
4	21.2	133	30
3	26.7	156	35
2	33.6	186	42
1	42.4	236	53
1/0	53.5	285	64
2/0	67.4	285	64
3/0	85.0	351	79
4/0	107.2	427	96

33 Cable Secureness Test

33.1 Each of three cable connected devices shall not show any evidence of damage to the cable, the enclosure of live parts, the strain relief means, or grounding path integrity after a force of 667 N/m^2 (150 lb/in^2) times the cross-sectional area of the cable [rounded up to the nearest 22 N (five lb) increment], but not less than 156 N (35 lbs), is applied and removed. It shall be tested using both the maximum and minimum diameter cable that the cable grip is designed to accommodate. After being subjected to each test described and with the force removed, there shall be no axial displacement of the supply conductors, conductor insulation, or outer jacket of the cable from the assembled condition exceeding the maximum allowed displacement as specified in Table 9.

Single User - Hard Copy || Purchased by Beuth Verlag From SAI Global - ILI Publishing on 6/16/2014 8:38:39 AM || ALL RIGHTS RESERVED

UL COPYRIGHTED MATERIAL –
NOT AUTHORIZED FOR FURTHER REPRODUCTION OR
DISTRIBUTION WITHOUT PERMISSION FROM UL

Table 9
Cable secureness test values

Device rating amperes	Torque N·m (ft-lb)	Maximum displacement mm (inches)
15	0.41 (0.3)	2.38 (3/32)
16 – 20	0.54 (0.4)	2.38 (3/32)
21 – 35	0.68 (0.5)	2.38 (3/32)
36 – 70	1.4 (1.0)	2.38 (3/32)
71 – 125	2.7 (2.0)	2.38 (3/32)
126 – 200	5.4 (4.0)	2.38 (3/32)
201 – 400	10.8 (8.0)	4.76 (3/16)
401 – 800	16.3 (12.0)	4.76 (3/16)

33.2 The device shall be assembled as intended onto a 305-mm (12-inch), or longer, length of electric vehicle cable placed in the device with its conductors positioned as if the conductors were to be connected to the terminals. Screws, nuts, or other hardware shall be tightened according to the manufacturer's instructions. The electric vehicle cable shall be cut at a right angle to its major axis, but not stripped.

33.3 The cable clamp shall be held firmly in place. The force shall be applied gradually to the cable, at a point not less than 150 mm (6 inches) from the cord or cable grip, in a direction perpendicular to the plane of the opening and in line with the cable. The force shall be sustained for a period of 1 minute.

33.4 After the test described in 33.3, a torque shall be applied to the electric vehicle cable at a point 150 mm (6 inches) from the cable grip as specified in Table 9 for 1 minute. The torque shall be applied in the direction least favorable to the clamp construction.

34 Impact Test (Plugs, Vehicle Connectors, and Breakaway Couplings)

34.1 Each of three plugs, vehicle connectors, or breakaway couplings wired with a length of the maximum size electric vehicle cable that corresponds to the rating of the device shall be tested.

34.2 The free end of the cable, which shall be approximately 2250 mm (90 inches) long, shall be fixed to a wall at a height of 1000 mm (39.4 inches) above the floor, as shown in Figure 2.

Single User - Hard Copy || Purchased by Beuth Verlag From SAI Global - ILI Publishing on 6/18/2014 8:38:39 AM || ALL RIGHTS RESERVED

UL COPYRIGHTED MATERIAL –
NOT AUTHORIZED FOR FURTHER REPRODUCTION OR
DISTRIBUTION WITHOUT PERMISSION FROM UL

Figure 2
Impact test equipment

Note: All dimensions given are in mm (inches)

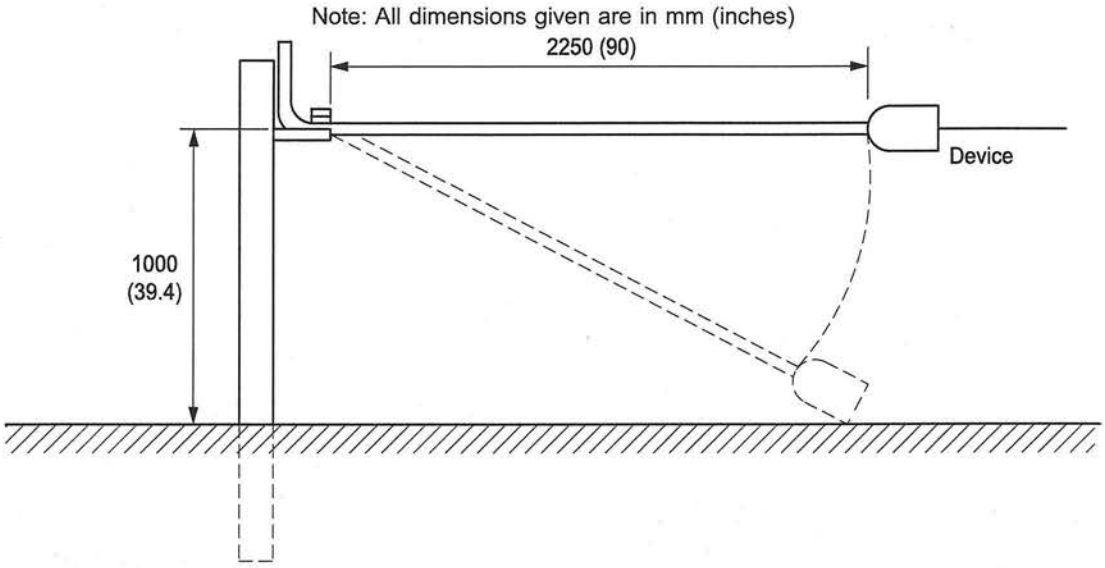

su1289

34.3 The device shall be held so that the cord or cable is horizontal and then allowed to fall to a concrete floor eight times. In between each drop, the fixing means described in 34.2 shall be loosened and the cable shall be rotated about its axis approximately 45° from its previous orientation. The fixing means shall then be tightened and the next drop shall be performed.

34.4 As a result of the applied impacts specified in 34.3, there shall be no cracking or breakage, deformation, loosening or detachment of parts, or other adverse effects that results in any of the following:

a) Making uninsulated live parts or internal wiring accessible to contact, by the probe illustrated in Figure 1. See 13.2.

b) Defeating the integrity of the enclosure so that acceptable mechanical protection is not afforded to the internal parts of the device or polarization of the device is defeated. Cracks, chips and dents that do not adversely affect the protection against electric shock or moisture shall be disregarded.

c) Operation, functioning, or installation of the device in a manner that allows the user to be exposed to a hazard. The device is not required to operate or function as intended after this test. The locking retaining means used to hold mating devices together are permitted to sustain damage if it does not interfere with the safe operation of the devices, or it is obvious that they are damaged and must be replaced.

d) A condition that results in the device not complying with the strain relief requirements, if applicable.

Single User - Hard Copy || Purchased by Beuth Verlag From SAI Global - ILI Publishing on 6/16/2014 8:38:39 AM || ALL RIGHTS RESERVED

UL COPYRIGHTED MATERIAL –
NOT AUTHORIZED FOR FURTHER REPRODUCTION OR
DISTRIBUTION WITHOUT PERMISSION FROM UL

e) A reduction of clearances and creepage distances between uninsulated live parts of opposite polarity, uninsulated live parts and accessible dead or grounded metal below the minimum acceptable values.

f) Any other evidence of damage that could increase the risk of fire or electric shock.

34.5 Immediately following the completion of this test, the devices shall be subjected to a repeated dielectric voltage-withstand test as described in the Dielectric Withstand Test, 30.

34.6 A device employing a nonmetallic enclosure or an enclosure of a zinc-based alloy shall be subjected to the following test. Each of three previously untested devices, wired with a length of the maximum size electric vehicle cable that corresponds to the rating of the device, shall be tested. The samples shall be conditioned for 6 hours in air maintained at −30 ±2°C (−22 ±3.6°F). Immediately following removal from the conditioning chamber the devices shall be subjected to the Impact Test as described in 34.1 – 34.5.

35 Crush Test

35.1 Each of three devices wired onto electric vehicle cable shall be placed between a pair of rigid, flat, steel plates that are at least 457 mm (18 inches) long and are horizontal and parallel to one another. One plate shall be moved gradually toward the other at a rate of 10.0 ±2.5 mm (1/2 ±1/8 inch) per minute, until a crushing force of 890 N (200 lbf) is applied, and held for one minute and then removed. Each device shall be oriented in a natural resting position before applying the force. The force shall not be applied to the projecting pins.

35.2 The electric vehicle cable used to wire the device shall be the minimum size and type of electric vehicle cable specified for use by the manufacturer in accordance with 56.1.2.

35.3 As a result of the applied force specified in 35.1, there shall not be any cracking or breakage, deformation, or other adverse effect that results in any of the following:

a) Making uninsulated live parts, other than exposed wiring terminals, or internal wiring accessible to contact by the probe illustrated in Figure 1. See 13.2.

b) Defeating the integrity of the enclosure so that acceptable mechanical protection is not afforded to the internal parts of the device or polarization of the device is defeated.

c) Operation, functioning, or installation of the device in a manner that allows the user to be exposed to a hazard. The device is not required to operate or function as intended after this test. The locking retaining means used to hold mating devices together are permitted to sustain damage if it does not interfere with the safe operation of the devices, or it is obvious that they are damaged and must be replaced.

d) A condition that results in the device not complying with the strain relief requirements, if applicable.

e) A reduction of spacings between uninsulated live parts of opposite polarity, uninsulated live parts and accessible dead or grounded metal below the minimum acceptable values.

f) Any other evidence of damage that could increase the risk of fire or electric shock.

Single User - Hard Copy || Purchased by Booth Varley From SAI Global - ILI Publishing on 6/16/2014 8:38:39 AM || ALL RIGHTS RESERVED

UL COPYRIGHTED MATERIAL –
NOT AUTHORIZED FOR FURTHER REPRODUCTION OR
DISTRIBUTION WITHOUT PERMISSION FROM UL

35.4 Immediately following the completion of this test, the devices shall be subjected to a repeated dielectric voltage withstand test as described in the Dielectric Withstand Test, 30.

35.5 A device employing a nonmetallic enclosure or an enclosure of a zinc-based alloy shall be subjected to the following test. Each of three previously untested devices, wired with a length of the maximum size electric vehicle cable that corresponds to the rating of the device, shall be tested. The samples shall be conditioned for 6 hours in air maintained at −30 ±2°C (−22 ±3.6°F). Immediately following removal from the conditioning chamber the devices shall be subjected to the Crush Test as described in 35.1 – 35.4.

36 Vehicle Driveover Test

36.1 Each of three devices wired onto electric vehicle cable shall be placed on a concrete floor in any normal position of rest. A crushing force of 4893 N (1100 lbf) shall be applied by a conventional automotive tire, P225/75R15, or an equivalent tire suitable for the load, mounted on a steel rim and inflated to a pressure of 218 ±13 kPa (32 ±2 psi). The wheel shall be rolled over the vehicle connector, plug, or breakaway coupling at a speed of 8 ±2 kmph (5 ±1.25 mph). Each device shall be oriented in a natural resting position before applying the force. The device under test shall be held or blocked in a fixed position so that it does not move substantially during the application of the applied force. In no case shall the force be applied to the projecting pins.

36.2 The electric vehicle cable used to wire the device shall be the minimum size and type of cable specified for use by the manufacturer in accordance with 56.1.2.

36.3 As a result of the applied force specified in 36.1, there shall not be any severe cracking, breakage, or deformation to the extent that results in any of the following:

a) Making uninsulated live parts, other than exposed wiring terminals, or internal wiring accessible to contact by the probe illustrated in Figure 1. See 13.2.

b) Defeating the integrity of the enclosure so that acceptable mechanical protection is not afforded to the internal parts of the device or polarization of the device is defeated.

c) Operation, functioning, or installation of the device in a manner that allows the user to be exposed to a hazard. The device is not required to operate or function as intended after this test. The locking retaining means used to hold mating devices together are permitted to sustain damage if it does not interfere with the safe operation of the devices, or it is obvious that they are damaged and must be replaced .

d) A condition that results in the device not complying with the strain relief requirements, if applicable.

e) A reduction of spacings between uninsulated live parts of opposite polarity, uninsulated live parts and accessible dead or grounded metal below the minimum acceptable values.

f) Any other evidence of damage that could increase the risk of fire or electric shock.

Single User - Hard Copy || Purchased by Beuth Verlag From SAI Global - ILI Publishing on 6/11/2014 8:38:39 AM || ALL RIGHTS RESERVED

UL COPYRIGHTED MATERIAL –
NOT AUTHORIZED FOR FURTHER REPRODUCTION OR
DISTRIBUTION WITHOUT PERMISSION FROM UL

36.4 Immediately following the completion of this test, the devices shall be subjected to a repeated dielectric voltage withstand test as described in the Dielectric Withstand Test, 30.

37 Withdrawal Force Test

37.1 Plugs and receptacles, vehicle connectors, and vehicle inlets

37.1.1 The pressure exerted by mating contacts of a plug with a receptacle, or an vehicle inlet with a vehicle connector, shall not be so great as to prevent easy insertion and withdrawal of the plug or vehicle connector, but sufficient to keep it from working out of the mating device in normal use. The force required to insert and withdraw the plug or vehicle connector into or from its mating part shall be measured. The force required to withdraw the plug or vehicle connector from its mating device shall be less than the force required to insert it. In addition, for plugs and vehicle connectors that do not meet the requirements in (a) – (c), the withdrawal force shall be greater than the minimum withdrawal forces shown in Table 10:

a) The plug or vehicle connector is of the delayed action type;

b) The plug or vehicle connector is of the interlocked type; or

c) The plug or vehicle connector is provided with a latch.

Table 10
Withdrawal force

	Minimum force[a]
Device rating, amperes	Withdrawal N (lbf)
15	18 (4)
16 – 20	22 (5)
21 – 32	27 (6)
33 – 63	27 (6)
64 – 125	27 (6)
126 – 800	27 (6)

[a] The withdrawal force includes the weight of the test plug or connector. If the weight of the mating device exceeds the specified withdrawal force, the mating device shall retain the test plug or connector.

37.1.2 Compliance shall be checked by determining the force necessary to withdraw the test plugs or test vehicle connectors from each of three mating devices, mounted so that the longitudinal axes of the contacts are vertical with the contact openings facing downward.

Single User - Hard Copy || Purchased by Earth Verlag From SAI Global - ILI Publishing on 6/16/2014 8:38:39 AM || ALL RIGHTS RESERVED

UL COPYRIGHTED MATERIAL –
NOT AUTHORIZED FOR FURTHER REPRODUCTION OR
DISTRIBUTION WITHOUT PERMISSION FROM UL

37.2 Breakaway couplings

37.2.1 The pressure exerted by mating contacts of a breakaway coupling shall not be so great as to prevent proper withdrawal or easy insertion. The force required to withdraw, or separate, the breakaway coupling, and the force required to insert, or reconnect, the breakaway coupling, shall be measured. The force required to withdraw, or separate, the breakaway coupling, shall be equal to or less than the marked separation force rating [see 56.1.1 (i)]. The force required to insert, or reconnect, the breakaway coupling, shall not exceed the withdrawal force measured during this test.

37.2.2 Compliance shall be checked in accordance with 37.1.2.

38 Grounding Path Current Test

38.1 The assembly of mating grounding devices shall carry the current specified in Table 11 for the time specified in that table. The current shall be based on the minimum size equipment grounding conductor for the ampere rating of the device. The components in the grounding path shall not crack, break, or melt.

Table 11
Short-time test currents

Device rating, amperes	Minimum size equipment grounding conductor (copper)		Time, seconds	Test current, amperes
	mm^2	AWG		
0 – 15	2.08	14	4	300
16 – 20	3.31	12	4	470
21 – 60	5.26	10	4	750
61 – 100	8.37	8	4	1180
101 – 200	13.3	6	6	1530
201 – 300	21.2	4	6	2450
301 – 400	26.7	3	6	3100
401 – 500	33.6	2	6	3900
501 – 600	42.4	1	6	4900
601 – 800	53.5	1/0	9	5050

38.2 Each of three mating devices shall be mounted and assembled as intended. A grounding conductor of the maximum intended size, not less than 0.609 m (2 ft) long, shall be connected to the grounding terminal of each device, with the terminals employed to hold the conductor tightened using a torque specified in Annex A, Ref. No. 12, or as specified by the manufacturer, whichever is less. Receptacles and vehicle inlets shall be wired with the minimum allowable size copper conductor. Plugs, vehicle connectors, and breakaway couplings shall be wired with flexible, stranded conductor from electric vehicle cable sized on the basis of the ampere rating of the device. The test current shall be passed through the mating devices and grounding wires in series. Two mating sets of devices shall be tested.

Single User - Hard Copy || Purchased by Beauti Vaqui From SAI Global - ILI Publishing on 6/10/2014 6:30:39 AM || ALL RIGHTS RESERVED

UL COPYRIGHTED MATERIAL –
NOT AUTHORIZED FOR FURTHER REPRODUCTION OR
DISTRIBUTION WITHOUT PERMISSION FROM UL

38.3 After having carried the current specified in 38.1, continuity shall exist on the test assembly when measured between the grounding conductors.

38.4 Any indicating device, such as an ohmmeter, battery-and-buzzer combination, or the like, is able to be used to determine whether continuity exists.

39 Short Circuit Test

39.1 General

39.1.1 Each of three wiring devices rated more than 1.2 kW shall be subjected to short circuit tests in accordance with 39.2.1 – 39.3.4.11. During this test, the devices shall be protected by a fuse or circuit breaker as specified in 39.2.1 and 39.2.2.

39.2 Protective devices

39.2.1 The fuses used for the tests shall be specified by the manufacturer in accordance with Table 12.

Table 12
Ratings of fuses used for test

Type of fuse[a]	Current, amperes	Maximum percent of rated motor full-load current[b]	Fuse size marking required
Non time-delay	0 – 600	400[c, d]	No
Non time-delay	0 – 600	< 400 but ≥ 300[e]	Yes
Non time-delay	0 – 600	< 300 but > 225[f]	Yes
Time-delay	0 – 600	≤ 225[g]	Yes

[a] Tests with 225 percent full load ampere time delay fuses are not considered representative of tests with 400 percent full load ampere non time-delay fuses.

[b] These values are approximate and shall be used when the manufacturer does not specify fuse sizes but refers to a maximum percent level, such as "Fuse not to exceed 300 percent of motor full load amps."

[c] If the calculated value of the fuse is between two standard ratings as specified in 39.2.3, a fuse of the nearest standard rating but not more than four times the full-load motor-current rating shall be used. If the calculated value of the fuse is less than 1 ampere, a fuse rated 1 ampere shall be used, and no marking of fuse size is required on the product.

[d] Tests with 400 percent non time-delay fuses cover use with 225 percent time delay fuses.

[e] Tests with non-time-delay fuses rated less than 400 percent, but equal to or greater than 300 percent cover use with 175 percent time delay fuses.

[f] Tests with less than 300 percent non time-delay fuses require additional testing with 225 percent (or as marked) time-delay fuses.

[g] The product shall be marked to indicate the level of protection and that the branch-circuit protective device might need to be of the time-delay type.

39.2.2 An inverse-time circuit breaker used for the test described in 39.2.7 – 39.2.12 shall be specified by the manufacturer in accordance with the following:

a) The inverse-time circuit breaker can be rated four times the maximum full-load motor-current rating for full-load currents of 100 amperes or less or three times the maximum full-load motor-current rating for full-load currents greater than 100 amperes. If the calculated value of the circuit breaker is between two standard ratings as specified in 39.2.4, a circuit breaker of

UL COPYRIGHTED MATERIAL –
NOT AUTHORIZED FOR FURTHER REPRODUCTION OR
DISTRIBUTION WITHOUT PERMISSION FROM UL

Single User - Hard Copy || Purchased by Beijing Verlag From SAI Global - ILI Publishing on 8/19/2014 8:38:39 AM || ALL RIGHTS RESERVED

the nearest standard rating less than the calculated value shall be used. If the calculated value of the circuit breaker is less than 15 amperes, a circuit breaker rated 15 amperes shall be used. No marking of the circuit breaker rating is required on the product.

b) The inverse-time circuit breaker can have a rating less than that specified in (a) if the product is marked to indicate the limit of protection.

39.2.3 Standard ampere ratings for fuses are 1, 3, 6, 10, 15, 20, 25, 30, 35, 40, 45, 50, 60, 70, 80, 90, 100, 110, 125, 150, 175, 200, 225, 250, 300, 350, 400, 450, 500, 600, 601, 700, 800, 1000, 1200, 1600, 2000, 2500, 3000, 4000, 5000, and 6000.

39.2.4 Standard ampere ratings for inverse-time circuit breakers are 15, 20, 25, 30, 35, 40, 45, 50, 60, 70, 80, 90, 100, 110, 125, 150, 175, 200, 225, 250, 300, 350, 400, 450, 500, 600, 700, 800, 1000, 1200, 1600, 2000, 2500, 3000, 4000, 5000, and 6000.

39.2.5 The marking referred to in 39.2.1, 39.2.2 and Table 12 can also be located in the installation instructions.

39.2.6 Each of three devices shall be tested in an enclosure judged to be representative of that likely to be encountered in service.

39.2.7 A receptacle or vehicle inlet shall be wired to the testing terminals by 1.2 m (4 ft) of wire. The wire shall be the smallest size having an ampacity of at least 125 percent of the maximum full-load motor-current rating of the device. The type of insulation shall be T or TW for 60°C wire and THW or THWN for 75°C wire. If the terminal will not receive that size of wire, the maximum allowable wire size shall be used. Two devices shall be tested. One device shall be wired with the load terminal leads connected together. For the second device, a mating device having its terminals shorted by a 1.2-m (4-ft) length of wire of the same wire size used for the receptacle or vehicle inlet shall be plugged into the receptacle or vehicle inlet. If an interlock is provided, the test shall be performed with the interlock switch or circuit closed. The length of test wire indicated can exceed the specified length of 1.2 m (4 ft), provided that the wire is in the circuit during calibration.

39.2.8 The grounding conductor or the metal enclosure shall be connected through a non time-delay, 30-ampere, cartridge fuse to the electrical supply live pole judged least likely to strike to ground. The fuse referred to in 39.1.1 shall be connected in series with the pole judged most likely to strike ground. The fuse used shall have an interrupting rating at least equal to the test current specified in Table 13. The connection shall be made to the load side of the limiting impedance by a 10 AWG (5.3 mm^2) copper wire that is 1.22 – 1.83 m (4 – 6 ft) long. The 10 AWG wire can be replaced by a 12 or 14 AWG (3.3 or 2.1 mm^2) wire, provided the branch circuit conductors the equipment is intended to be connected to are 12 or 14 AWG respectively.

Single User - Hard Copy Is Purchased by Bauth Verlag From SAI Global - ILI Publishing on 6/19/2014 9:38:39 AM || ALL RIGHTS RESERVED

UL COPYRIGHTED MATERIAL –
NOT AUTHORIZED FOR FURTHER REPRODUCTION OR
DISTRIBUTION WITHOUT PERMISSION FROM UL

Table 13
Short circuit test values

Device rating, kw	Test current, amperes[a]	Power factor[c]
1.2 – 37.3	5,000[b]	0.70 – 0.80
38 – 149	10,000	0.70 – 0.80
150 – 298	18,000	0.25 – 0.30

[a] Symmetrical rms amperes.
[b] 10,000 amperes at manufacturer's option.
[c] Lower power factors may be used.

39.2.9 During the test using fuse protection, surgical cotton shall be placed at all openings, covers, flanges, joints, and the like, on the outside of the enclosure.

39.2.10 Equipment rated for direct current shall be tested using a direct current electrical source; alternating-current equipment shall be tested on a 60 Hz essentially sinusoidal current electrical source. The open-circuit voltage of the test circuit shall be 100 to 105 percent of the voltage rating of the overload relay, except that the voltage can exceed 105 percent of the rated voltage with the concurrence of those concerned. The test circuit shall be capable of delivering the current specified in Table 13 for a given rating when the system is short-circuited at the testing terminals to which the device under test shall be connected, and this shall be verified by means of an oscillograph.

39.2.11 Air core type reactors shall be employed in the line to obtain the power factor in accordance with Table 13. The reactors can be connected in parallel, but no reactor shall be connected in parallel with a resistor, except that a reactor in any phase can be shunted by a resistor if the power consumed by the resistor is approximately 0.6 percent of the reactive volt-amperes in the reactor in that phase. The minimum value of the shunting resistance used with a reactor having negligible resistance shall be calculated from the equation:

$$R = 167\frac{E}{I}$$

in which:

E is the voltage across the reactor with current I flowing as determined by oscillographic measurement during the short circuit calibration or by proportion from meter measurements at some lower current.

39.2.12 If a group of devices having different ratings are of the same construction and material and are intended for use with one size of fuse, tests on the lowest and highest ratings shall be considered to be representative of that group.

Single User - Hard Copy || Purchased by Beuth Verlag From SAI Global - ILI Publishing on 6/16/2014 8:38:39 AM || ALL RIGHTS RESERVED

UL COPYRIGHTED MATERIAL –
NOT AUTHORIZED FOR FURTHER REPRODUCTION OR
DISTRIBUTION WITHOUT PERMISSION FROM UL

39.2.13 After the protective device has cleared the fault, the wiring device shall comply with the following:

a) There shall not be any discharge of parts. The contacts shall not disintegrate, evaporate or weld. There shall not be any damage to the device, the wiring terminals or other parts that would impair the function of the device.

b) There shall not be any breakage of insulating bases or supports to the extent that the integrity of the mounting or insulation of live parts is impaired.

c) There shall not be any ignition of the cotton, cord or cable insulation, or any other risk of a fire and the circuit breaker shall operate when the test circuit is closed.

d) The fuse connected between the live pole and the grounding pole of the enclosure shall not open.

39.3 Calibration of test circuits

39.3.1 General

39.3.1.1 The available current capacity of the circuit shall be at least the value required for the short-circuit-withstand rating of the device. The frequency of the test circuit shall be 60 ±12 Hz.

39.3.2 Available current of 10,000 amperes or less

39.3.2.1 For an alternating-current circuit intended to deliver 10,000 amperes or less, the current and power factor shall be determined as follows:

a) For a 3-phase test circuit, the current shall be determined by averaging the rms values of the first complete cycle of current in each of the three phases; the voltage to neutral shall be used to determine the power factor.

b) For a single-phase test circuit, the current shall be the rms value of the first complete cycle (see Figure 3) when the circuit is closed to produce an essentially symmetrical current waveform. The direct-current component shall not be added to the value obtained when measured as illustrated. In order to obtain the desired symmetrical waveform of a single-phase test circuit, controlled closing is recommended, although random closing methods can be used. The power factor shall be determined by referring the open-circuit voltage wave to the two adjacent zero points at the end half of the first complete current cycle by transposition through a suitable timing wave. The power factor shall be computed as an average of the values obtained by using these two current zero points.

Single User - Hard Copy || Purchased by Beuth Verlag From SAI Global - IJ Publishing on 6/10/2014 8:38:30 AM || ALL RIGHTS RESERVED

UL COPYRIGHTED MATERIAL –
NOT AUTHORIZED FOR FURTHER REPRODUCTION OR
DISTRIBUTION WITHOUT PERMISSION FROM UL

Figure 3
Determination of current and power factor for circuits of 10,000 amperes and less

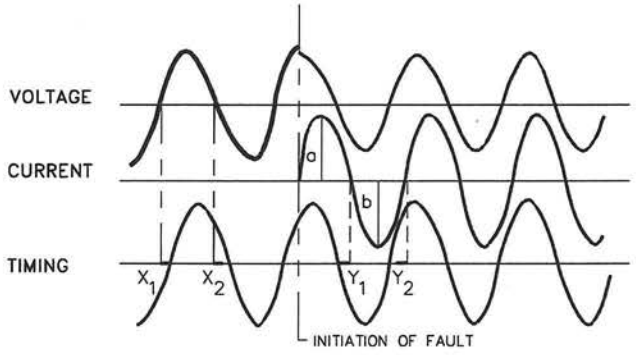

$$\text{Current} = \frac{a+b}{2} \text{ rms calibration of instrument element}$$

$$\text{Power Factor} = \frac{\text{Cosine}[(Y_1+X_1) \times 180°] + \text{Cosine}[(Y_2+X_2) \times 180°]}{2}$$

in which:

X and Y values are fractions of the 1/2-cycle distance in which they occur.

SB0740A

39.3.3 Available current more than 10,000 amperes

39.3.3.1 For circuits intended to deliver more than 10,000 amperes, the current and power factor shall be determined in accordance with the requirements in 39.3.3.2 – 39.3.3.8. Instrumentation used to measure test circuits of over 10,000 amperes shall comply with the requirements in 39.3.4.1 – 39.3.4.11.

39.3.3.2 The rms symmetrical current shall be determined, with the supply terminals short-circuited by measuring the alternating-current component of the wave at an instant 1/2 cycle (on the basis of the test frequency timing wave) after the initiation of the short circuit. The current shall be calculated in accordance with Figure 7 in Annex A, Ref. No. 24.

39.3.3.3 For a 3-phase test circuit, the rms symmetrical current shall be the average of the currents in the three phases. The rms symmetrical current in any one phase shall not be less than 90 percent of the required test current.

39.3.3.4 The test circuit and its transients shall be such that:

a) 3 cycles after initiation of the short circuit, the symmetrical alternating component of current will not be less than 90 percent of the symmetrical alternating component of current at the end of the first 1/2 cycle, or

Single User - Hard Copy || Purchased by Beuth Verlag From SAI Global - ILI Publishing on 6/16/2014 8:38:39 AM || ALL RIGHTS RESERVED

UL COPYRIGHTED MATERIAL –
NOT AUTHORIZED FOR FURTHER REPRODUCTION OR
DISTRIBUTION WITHOUT PERMISSION FROM UL

b) The symmetrical alternating component of current at the time at which the overcurrent-protective device will interrupt the test circuit is at least 100 percent of the rating for which the device is being tested.

In 3-phase circuits, the symmetrical alternating component of current of all three phases shall be averaged.

39.3.3.5 The power factor shall be determined at an instant 1/2 cycle (on the basis of the test frequency timing wave) after the short circuit occurs. The total asymmetrical rms amperes shall be measured in accordance with 39.3.3.2 and the ratio M_A or M_M shall be calculated as follows:

$$M_A\ (3\ phase) = \frac{Average\ 3\ phases - Asymmetrical\ rms\ Amperes}{Average\ 3\ phases - Symmetrical\ rms\ Amperes}$$

$$M_M\ (1\ phase) = \frac{Asymmetrical\ rms\ Amperes}{Symmetrical\ rms\ Amperes}$$

Using ratio M_A or M_M, the power factor shall be determined from Table 14.

Table 14
Short-circuit power factor

Short-circuit power factor, percent	Ratio M_M[a]	Ratio M_A[a]	Short-circuit power factor, percent	Ratio M_M[a]	Ratio M_A[a]
0	1.732	1.394	30	1.130	1.066
1	1.696	1.374	31	1.121	1.062
2	1.665	1.355	32	1.113	1.057
3	1.630	1.336	33	1.105	1.053
4	1.598	1.318	34	1.098	1.049
5	1.568	1.301	35	1.091	1.046
6	1.540	1.285	36	1.084	1.043
7	1.511	1.270	37	1.078	1.039
8	1.485	1.256	38	1.073	1.036

UL COPYRIGHTED MATERIAL –
NOT AUTHORIZED FOR FURTHER REPRODUCTION OR
DISTRIBUTION WITHOUT PERMISSION FROM UL

Table 14 Continued on Next Page

Single User - Hard Copy || Purchased by Beuth Verlag From SAI Global - LI Publishing on 6/16/2014 6:38:39 AM || ALL RIGHTS RESERVED

Table 14 Continued

Short-circuit power factor, percent	Ratio M_M[a]	Ratio M_A[a]	Short-circuit power factor, percent	Ratio M_M[a]	Ratio M_A[a]
9	1.460	1.241	39	1.068	1.033
10	1.436	1.229	40	1.062	1.031
11	1.413	1.216	41	1.057	1.028
12	1.391	1.204	42	1.053	1.026
13	1.372	1.193	43	1.049	1.024
14	1.350	1.182	44	1.045	1.022
15	1.330	1.171	45	1.041	1.020
16	1.312	1.161	46	1.038	1.019
17	1.294	1.152	47	1.034	1.017
18	1.277	1.143	48	1.031	1.016
19	1.262	1.135	49	1.029	1.014
20	1.247	1.127	50	1.026	1.013
21	1.232	1.119	55	1.015	1.008
22	1.218	1.112	60	1.009	1.004
23	1.205	1.105	65	1.004	1.002
24	1.192	1.099	70	1.002	1.001
25	1.181	1.093	75	1.0008	1.0004
26	1.170	1.087	80	1.0002	1.00005
27	1.159	1.081	85	1.00004	1.00002
28	1.149	1.075	100	1.00000	1.00000
29	1.139	1.070			

[a] See 39.3.3.5.

39.3.3.6 The power factor of a 3-phase circuit is able to be calculated by using controlled closing so that upon subsequent closings a different phase will be caused to have maximum asymmetrical conditions. The power factor of each phase could then be determined using the method described for single-phase circuits in 39.3.3.5. The power factor of the 3-phase circuit is considered to be the average of the power factors of each of the phases.

UL COPYRIGHTED MATERIAL –
NOT AUTHORIZED FOR FURTHER REPRODUCTION OR
DISTRIBUTION WITHOUT PERMISSION FROM UL

Single User - Hard Copy || Purchased by Beuth Verlag From SAI Global - ILI Publishing on 6/16/2014 8:38:39 AM || ALL RIGHTS RESERVED

39.3.3.7 The recovery voltage shall be at least equal to the rated voltage of the device. The peak value of the recovery voltage within the first complete half cycle after clearing and for the next five successive peaks shall be at least equal to 1.414 times the rms value of the rated voltage of the device. Each of the peaks shall not be displaced by more than ±10 electrical degrees from the peak values of the open-circuit recovery voltage – that is, the displacement of the peak from its normal position on a sinusoidal wave. The average of the instantaneous values of recovery voltage each of the first six half cycles measured at the 45 degree and 135 degree points on the wave shall be not less than 85 percent of the rms value of the rated voltage of the device. The instantaneous value of recovery voltage measured at the 45 degree and 135 degree points of each of the first six half cycles shall in no case be less than 75 percent of the rms value of the rated voltage of the device.

39.3.3.8 If there is no attenuation or phase displacement of the first full cycle of the recovery voltage wave when compared with the open-circuit secondary voltage wave before current flow in a circuit that employs secondary closing, the detailed measurement of recovery voltage characteristics as indicated in 39.3.3.7 is not required.

39.3.4 Instrumentations for test currents above 10,000 amperes

39.3.4.1 The galvanometers in a magnetic oscillograph employed for recording voltage and current during circuit calibration and while testing shall be of a type having a flat (±5 percent) frequency response from 50 – 1200 Hz. For fast acting fuses, current limiters, or motor-short-circuit protectors, a galvanometer should have a flat frequency response from 50 – 9000 Hz, or an oscilloscope should be used to obtain accurate values of peak current, (I_p), and energy let-through, (I^2t).

39.3.4.2 Galvanometers shall be calibrated as described in 39.3.4.3 – 39.3.4.6.

39.3.4.3 When a shunt is used to determine the circuit characteristics, a direct-current calibrating voltage is normally used. The voltage applied to the oscillograph galvanometer circuit shall result in a deflection of the galvanometer approximately equivalent to that which is expected when the same galvanometer circuit is connected to the shunt and the nominal short-circuit current is flowing. The voltage shall be applied so as to cause the galvanometer to deflect in both directions. Additional calibrations shall be made using approximately 50 percent and approximately 150 percent of the voltage used to obtain the deflection indicated above, except that if the anticipated maximum deflection is less than 150 percent, such as a symmetrically closed single-phase circuit, any other suitable calibration point shall be chosen. The sensitivity of the galvanometer circuit in volts per millimeter (or inch) shall be determined from the deflection measured in each case, and the results of the six trials averaged. The peak amperes per millimeter (or inch) shall be obtained by dividing the sensitivity by the resistance of the shunt. This multiplying factor shall be used for the determination of the rms current as described in 39.3.3.2.

39.3.4.4 A 60 Hz sine-wave potential can be used for calibrating the galvanometer circuit, using the same general method described in 39.3.4.3. The resulting factor shall be multiplied by 1.414.

39.3.4.5 When a current transformer is used to determine the circuit characteristics, an alternating current shall be used to calibrate the galvanometer circuit. The value of current applied to the galvanometer circuit shall result in a deflection of the galvanometer approximately equivalent to that which is expected when the same galvanometer is connected to the secondary of the current transformer and nominal short circuit current is flowing in the primary. Additional calibrations shall be made at approximately 50 percent and approximately 150 percent of the current used to obtain the deflection indicated above, except that if the anticipated maximum deflection is less than 150 percent, such as in a symmetrically closed single-phase circuit, any other suitable calibration point shall be chosen. The sensitivity of the galvanometer circuit in rms amperes per millimeter (or inch) shall be determined in each case and the results averaged. The

Single User - Hard Copy Is Purchased by Beuth Verlag From SAI Global - ILI Publishing on 6/16/2014 8:38:39 AM | ALL RIGHTS RESERVED

UL COPYRIGHTED MATERIAL –
NOT AUTHORIZED FOR FURTHER REPRODUCTION OR
DISTRIBUTION WITHOUT PERMISSION FROM UL

average sensitivity shall be multiplied by the current-transformer ratio and by 1.414 to obtain peak amperes per inch. This constant shall be used for the determination of the rms current as described in 39.3.3.2.

39.3.4.6 All the galvanometer elements employed shall line-up properly in the oscillograph, or the displacement differences shall be noted and used as needed.

39.3.4.7 The sensitivity of the galvanometers and the recording speed shall be such that the values of voltage, current, and power factor are capable of being determined accurately. The recording speed shall be at least 1.5 m (60 inches) per second.

39.3.4.8 With the test circuit adjusted to provide the specified values of voltage and current and with a noninductive (coaxial) shunt that has been found acceptable for use as a reference connected into the circuit, the tests described in 39.3.4.9 and 39.3.4.10 shall be conducted to verify the accuracy of the manufacturer's instrumentation.

39.3.4.9 With the secondary open-circuited, the transformer shall be energized and the voltage at the test terminals observed to see if rectification is occurring, making the circuit unacceptable for test purposes, because the voltage and current will not be sinusoidal. Six random closings shall be made to demonstrate that residual flux in the transformer core will not cause rectification. If testing is done by closing the secondary circuit, it is permitted to omit this check providing testing is not commenced before the transformer has been energized for approximately 2 seconds, or longer if an investigation of the test equipment shows that a longer time is necessary.

39.3.4.10 With the test terminals connected together by means of a copper bar, a single-phase circuit shall be closed as nearly as possible at the moment that will produce a current wave with maximum offset. The short circuit current and voltage shall be recorded. The primary voltage shall be recorded if primary closing is used. The current measured by the reference shunt shall be within 5 percent of that measured using the manufacturer's instrumentation, and there shall be no measurable variation in phase relationship between the traces of the same current. Controlled closing is not required for polyphase circuits.

39.3.4.11 When the verification of the accuracy of the manufacturer's instrumentation is completed, the reference coaxial shunt shall be removed from the circuit. The reference coaxial shunt shall not be used during the final calibration of the test circuit or during the testing of devices.

40 Strength of Insulating Base and Support Test

40.1 Each of three devices for field connection shall not be damaged when 110 percent of the specified terminal tightening torque is applied to the wire securing means of a pressure wire connector securing the maximum intended size conductor.

40.2 Damage is considered to have occurred if any cracking, bending, breakage or displacement of the insulating base, current carrying parts, assembly parts, or device enclosure reduces electrical spacings to less than those required, exposes live parts, or otherwise impairs the intended secure installation and use of the device.

Single User - Hard Copy Is Purchased by Beuth Verlag From SAI Global - ILI Publishing on 6/10/2014 8:38:39 AM || ALL RIGHTS RESERVED

UL COPYRIGHTED MATERIAL –
NOT AUTHORIZED FOR FURTHER REPRODUCTION OR
DISTRIBUTION WITHOUT PERMISSION FROM UL

40.3 The terminal tightening torque to be used for this test shall be that assigned by the manufacturer and marked in accordance with 56.10.1 or, in the absence of an assigned torque, the torque specified in Annex A, Ref. No. 12.

41 No-Load Endurance Test

41.1 Each of three plugs and receptacles, vehicle connectors and vehicle inlets, or breakaway couplings provided with a mechanical or electrical interlock (that is, a switch, circuit breaker or control pilot circuit), or intended for disconnect use only (not for current interrupting) shall be subjected to a no-load endurance test. For this test, mating devices shall be tested by completely inserting one device into its respective mating device (that is, the receptacle or inlet) in the intended manner to permit its operation and then completely withdrawing the device, either manually or mechanically, the interlock being locked and unlocked after each complete insertion of the device. The duration of the test shall be 10,000 insertions and withdrawals, at a rate no greater than ten per minute unless specified otherwise. During this test, the devices under test shall be subjected to exposure to contaminants, for a maximum of five seconds after each 1000 cycles of operation and allowed to dry completely before resuming the cycling test.

41.2 Plugs, vehicle connectors, and breakaway couplings shall be dipped into a solution of 5 percent by volume of salt and 5 percent by volume of sand (ISO 12103-A4 – Coarse Grade Test Dust, or the equivalent) suspended in distilled water, for a maximum of five seconds and removed. A tank or vessel shall be filled with the solution to a depth of 25 ±5 mm (1 ±0.2 inch). The devices shall be dipped in a manner representing any natural position the device would come to rest if it fell to the ground. The vessel or tank shall be large enough to allow the device to come to rest on the bottom surface. Receptacles and vehicle inlets shall be dipped in a manner exposing any face of the device that is capable of being exposed to the elements during use to the contaminants.

41.3 Following the exposure to contaminants, the device shall be wiped dry externally and allowed to dry. Small parts or other mechanisms that are capable of being serviced without the use of special tools can be serviced periodically in accordance with the manufacturer's recommended maintenance practices. Contacts are not to be adjusted, cleaned, lubricated, or otherwise conditioned before or during the test. There shall be no mechanical or visible damage to any of the parts including the interlocking mechanism.

41.4 These devices shall be marked in accordance with 56.4.1, unless the devices are subjected to the Endurance with Load Test, 42, or if they are provided with an interlocking mechanism or control pilot contact which will remove power prior to interrupting the connection.

42 Endurance with Load Test

42.1 Each of three devices shall withstand (without excessive wear or other harmful effects) the mechanical, electrical and thermal stresses occurring in normal use.

42.2 A plug and a receptacle, a vehicle connector and vehicle inlet, or a breakaway coupling intended for current interruption shall be subjected to an endurance test in which one device shall be completely inserted into its respective mating device in the intended manner to permit its operation and then completely withdrawn, either manually or mechanically.

Single User - Hard Copy Is Purchased by Beuth Verlag From SAI Global - ILI Publishing on 6/17/2014 6:38:39 AM || ALL RIGHTS RESERVED

UL COPYRIGHTED MATERIAL –
NOT AUTHORIZED FOR FURTHER REPRODUCTION OR
DISTRIBUTION WITHOUT PERMISSION FROM UL

42.3 The duration of the test shall be 10,000 insertions and withdrawals with load at rated current and voltage. During this test, the devices under test shall be subjected to exposure to contaminants (5 percent by volume of salt and sand, ISO 12103-A4 – Coarse Grade Test Dust, suspended in distilled water) after each 1000 cycles of operation and allowed to dry completely before resuming the cycling test.

42.4 Devices under test shall be operated manually or mechanically at rated voltage and current at a rate no greater than 10 cycles per minute.

42.5 If the test is run mechanically, the rate of operation shall not be greater than 10 cycles per minute, with an average velocity of 0.76 ±0.8 m/s (30 ±3 inches/s) in each direction.

42.6 The test shall be conducted on direct current, or if the device is marked in accordance with 56.5.1, on alternating current. When alternating current is used for the test, the power factor of the load shall be from 0.75 – 0.80.

42.7 For dual-rated devices, a test on ac can be waived if acceptable results have been obtained from an equivalent or higher volt-ampere test at a dc potential that is equal to or greater than the ac potential rating.

42.8 During the test, no sustained arcing shall occur. After the test, the devices shall not show:

a) Wear impairing in the further use of the device;

b) Deterioration of enclosures or barriers;

c) Damage to the entry holes for the plug contacts that might impair proper working;

d) Loosening of electrical or mechanical connections.

43 Overload Test

43.1 After being tested as described in 43.2 – 43.10, each of three devices, not provided with an interlocking means or control pilot contact, shall not exhibit any electrical or mechanical failure of the device, or burning, pitting, or welding of the contacts. Devices intended for current interruption shall still be able to function after this test.

43.2 An additional material that is provided with the intent to reduce or confine the arcing in the contact chamber of a device and that decomposes or is otherwise affected by the arcing shall be removed for all of the overload tests.

43.3 The device under test shall be operated manually or mechanically in the same manner as the Endurance with Load Test, 42, by inserting a device into its respective mating device , while it is connected to a suitable load, and then withdrawing the device. The equipment grounding contact shall be connected to ground through a fuse. The device shall make and break 150 percent of its rated current for 50 cycles of operation at a rate not higher than 10 cycles per minute.

Single User - Hard Copy || Purchased by Beuth Verlag From SAI Global - IHS Publishing on 6/18/2014 8:38:39 AM || ALL RIGHTS RESERVED

UL COPYRIGHTED MATERIAL –
NOT AUTHORIZED FOR FURTHER REPRODUCTION OR
DISTRIBUTION WITHOUT PERMISSION FROM UL

43.4 A separate set of mating devices shall be used for each overload test, except, upon request from the manufacturer, one device can be used for all of the overload tests.

43.5 Except as noted in 43.6, the test on a combination of mating devices that have multiple voltage and ampere ratings shall be performed at:

a) 150 percent of the rated current that corresponds to the maximum rated voltage,

b) 150 percent of the maximum rated current at the corresponding rated voltage, and

c) 150 percent of the rated current at the corresponding rated voltage that results in maximum power per pole.

The tests in (a), (b), or (c) can be waived if that particular condition is fully represented by the other test or tests.

43.6 A test on alternating-current can be waived if adequate results have been obtained from an equivalent or higher volt-ampere test at a direct current potential that is equal to or greater than the alternating-current potential rating.

43.7 Contacts of the devices under test shall not be adjusted, lubricated, or otherwise conditioned before or during the test.

43.8 The device shall be mounted and wired to represent service conditions. Exposed metal parts shall be connected through a fuse to:

a) Ground,

b) The grounded conductor of the test circuit, or

c) A circuit conductor that differs by at least the rated potential from one or more of the remaining conductors in the circuit.

43.9 The fuse in the grounding conductor shall have a 15 ampere rating if the device under test is rated at 30 amperes or less. If the device under test is rated at more than 30 amperes, the grounding fuse shall have a rating of 30 amperes. For the line fuse, use the next higher commercial fuse rating than the value of the test current in the test circuit. Neither the line fuse or the grounding fuse shall open during the test.

43.10 The test shall be conducted using direct-current, or if the device is marked in accordance with 56.5.1, on alternating current. When alternating-current is used, the power factor of the load shall be from 0.75 – 0.80.

44 Electromagnetic Test (Pilot Contacts)

44.1 The pilot contacts of each of three devices used for controlling a contact, relay, or other magnetically-operated device shall perform satisfactorily when subjected to an overload test consisting of 50 operations, making and breaking the inrush current based on the contact rating, followed by 6,000 operations at normal rated current, in a circuit of 110 percent of the test potential in Table 5. The load shall consist of an electromagnet representative of the load that the device is intended to control. Except as noted in 44.2, the load shall be as indicated in Table 15.

Single User - Hard Copy || Purchased by Beuth Verlag From SAI Global - IEJ Publishing on 8/10/2014 8:38:39 AM || ALL RIGHTS RESERVED

UL COPYRIGHTED MATERIAL –
NOT AUTHORIZED FOR FURTHER REPRODUCTION OR
DISTRIBUTION WITHOUT PERMISSION FROM UL

Table 15
Standard electromagnetic loads[c]

Test potential in volts	Standard duty		Heavy duty	
	Normal current	Current inrush	Normal current	Current inrush
120 ac[a]	3.0	30	6.0	60
240 ac[a]	1.5	15	3.0	30
480 ac[a]	0.75	7.5	1.5	15
600 ac[a]	0.6	6	1.2	12
30 dc	3.0	30	6.0	60
125 dc[b]	1.1	–	2.2	–
250 dc[b]	0.55	–	1.1	–
600 dc[b]	0.2	–	0.4	–

[a] Power factor 0.35 or less.
[b] Inductive loads, as specified in Annex A, Ref. No. 25, and Annex A, Ref. No. 15.
[c] For other values, see Annex A, Ref. No. 15.

44.2 A load other than one of those described in Table 15 can be used after due consideration of:

a) Need for a device to control an electromagnetic load having other characteristics.

b) The means utilized for matching the rating of the device to that of the load.

c) The manufacturer's marked recommendations.

44.3 For the operations at rated load, the device under test shall be operated manually or mechanically in the same manner as the Endurance with Load Test, 42, by inserting the device into its respective mating device while it is connected to a suitable load, and then withdrawing the device. The equipment grounding contact shall be connected to ground through a fuse. For the first ten operations the device shall make and break the load as quickly as possible. For the next 990 operations the device shall be operated at a rate of one second "on" and one second "off". The remaining 5000 cycles shall be operated at a rate not higher than 10 cycles per minute.

45 Temperature Rise Test

45.1 Tests shall be conducted at an ambient temperature between 10 – 40°C (50 – 104°F). If the tests are conducted at an ambient temperature of other than 25°C (77°F), the results shall be adjusted to an ambient temperature of 25°C (77°F) by adding or subtracting the appropriate variation between 25°C (77°F) and the ambient.

Single User - Hard Copy || Purchased by Berth Verlag From SAI Global - (L) Publishing on 6/10/2014 6:38:39 AM || ALL RIGHTS RESERVED

UL COPYRIGHTED MATERIAL –
NOT AUTHORIZED FOR FURTHER REPRODUCTION OR
DISTRIBUTION WITHOUT PERMISSION FROM UL

45.2 The temperature rise of each of three devices measured at the points described in 45.3 shall not exceed 50°C (122°F) when the device is carrying its maximum rated current. This temperature rise is based on devices intended to be wired with conductors rated 105°C (221°F).

45.3 The temperature measurement shall be made on the wiring terminals and at the contacts of the equipment, if they are accessible for mounting thermocouples. If the equipment has no wiring terminals or they or the contacts are inaccessible, temperatures shall be measured as close as possible to the face of the equipment on the male contacts inserted in the mating device.

45.4 The temperature test shall be made following the overload test on the equipment, and shall continue, in accordance with 45.5, until stabilized temperatures are attained. A temperature is considered to be stabilized when three successive readings taken at intervals of 10 percent of the previously elapsed duration of the test indicate no increase greater than 2°C (4°F). Generation of heat from sources other than contacts shall be minimized as much as possible. For example, each connection to the equipment under test shall be made by means of a length of at least 150 mm (6 inches) of the intended type and size of wire or cable, see 16.1 and 56.1.2. In the case of a plug, vehicle connector, or breakaway coupling body, wires of the indicated ampacity shall be used regardless of the size of the cord that is intended to be used with the device. The contacts of equipment under test shall be connected together by means of an inserted mating device. The terminals of the device shall be short circuited by means of the shortest feasible lengths of the wire as previously described.

45.5 For devices rated less than 200 A, the load shall be applied continuously. For plugs, vehicle connectors, or breakaway couplings rated 200 A or greater, the load shall be applied for 20 minutes followed by a no-load period of 10 minutes. This cycle (20 minutes load, 10 minutes no-load) shall be repeated until temperatures stabilize. The plug, vehicle connector, or breakaway coupling shall be coupled to mating device that employs the same AWG size power conductors that are utilized in the plug, vehicle connector, or breakaway coupling. For receptacles and vehicle inlets rated 200 A or greater, the load shall be applied for a single 20 minute period, with the AWG size of the power conductors sized as normally employed in the receptacle or vehicle inlet.

46 Fuseholder Temperature Test

46.1 When tested as described in 46.2 – 46.7, the temperature rise of each of three devices incorporating a fuseholder shall not exceed the following:

a) 30°C (54°F) on the fuse clips when tested with a dummy fuse;

b) 30°C (54°F) at the wiring terminals or cable connections at any time (see 46.6); and

c) The relative thermal index of the surrounding insulating material, minus an assumed ambient of 25°C (77°F), at any time (see 46.6).

46.2 The test shall be conducted on a set of three previously untested devices, or can be conducted in conjunction with the Temperature Rise Test, 45, if agreeable to all concerned. The test shall be conducted with a dummy fuse.

Single User - Hard Copy || Purchased by Beuth Verlag From SAI Global - ILI Published on 6/18/2014 4:39:39 AM || ALL RIGHTS RESERVED

UL COPYRIGHTED MATERIAL –
NOT AUTHORIZED FOR FURTHER REPRODUCTION OR
DISTRIBUTION WITHOUT PERMISSION FROM UL

46.3 The devices shall be wired in a series circuit with the blades of one device connected by the shortest possible length of solid copper wire soldered to the next device. For devices intended for use with electric vehicle cable, each connection to the device being tested shall be made by means of a 150 mm (6 inches) or shorter length of the appropriate type of cable that has an ampacity at least equal to that of the device. For a vehicle inlet, Type RH or Type TW lead-in wires no more than 150 mm (6 inches) long shall be connected to the wiring terminals. Wire of the intended ampacity shall be used regardless of the size of the cable which is intended to be used with the device.

46.4 Temperatures shall be measured by means of thermocouples attached to the fuse clips, the insulating material of the device body in proximity to the fuseholder, and the wiring terminals or cable connections. If the wiring terminals or cable connections are not accessible for mounting thermocouples, the thermocouples shall be attached to the blades as close as possible to the face of the device.

46.5 The test shall continue for at least 4 hours even when stabilized temperatures have been attained in a shorter interval of time. A temperature is considered to be stabilized when three consecutive readings, taken at 5 minute intervals, indicate no further rise above the ambient temperature.

46.6 The devices shall be subjected to a test current equal to the maximum ampere rating of the intended fuse. The dummy fuse size for devices incorporating Class CC, G, H, J, K, or R shall be as specified in Annex A, Ref. No. 26. To represent the heating of a live fuse, 20°C (36°F) shall be added to the recorded temperature rise on the wiring terminals, cable connections, and surrounding insulating materials.

In Mexico and the US, the dummy fuse size for devices employing miscellaneous, miniature, and micro fuses shall be as indicated in Table 16. In Canada, the dummy fuse size for devices employing miniature or micro fuses shall be in accordance with Annex A, Ref. No. 22.

Table 16
Nominal dimensions of dummy fuses for miscellaneous, miniature, and micro fuses

Size of fuse	Dimensions		
	Outside diameter	Wall thickness	Length
5 x 20 mm (0.2 x 0.8 inch)	5 mm (0.2 inch)	1.2 mm (0.047 inch)	20 mm (0.8 inch)
6.4 x 31.8 mm (1/4 x 1-1/4 inches)	6.4 mm (0.25 inch)	1.2 mm (0.047 inch)	31.8 mm (1-1/4 inches)

46.7 The thermocouples shall consist of 28 – 32 AWG (0.08 – 0.032 mm^2) iron and constantan wires. It is a common practice to employ thermocouples consisting of 30 AWG (0.05 mm^2) iron and constantan wires with a potentiometer type of indicating instrument. This equipment will be used if a referee measurement of temperature is necessary.

47 Surface Temperatures

47.1 During the Temperature Rise Test, 45, the temperature of a surface on each of three devices that is able to be contacted by the user shall not be more than the value specified in Table 17. If the test is conducted at a room temperature of other than 25°C (77°F), the results shall be corrected to that temperature. For units intended for installation outdoors or on-board an EV, the results shall be corrected to 40°C (104°F).

UL COPYRIGHTED MATERIAL –
NOT AUTHORIZED FOR FURTHER REPRODUCTION OR
DISTRIBUTION WITHOUT PERMISSION FROM UL

Single User - Hard Copy || Purchased by Beuth Verlag From SAI Global - ILI Publishing on 6/10/2014 6:38:38 AM || ALL RIGHTS RESERVED

Table 17
Maximum surface temperatures

Location	Composition of surface[a]	
	Metal	Nonmetallic
Handles or knobs that are grasped for lifting, carrying, or holding	50°C (122°F)	60°C (140°F)
Handles or knobs that are contacted but do not involve lifting, carrying, or holding; and other surfaces subject to contact and user maintenance	60°C (140°F)	85°C (185°F)
Surfaces subject to casual contact	70°C (158°F)	95°C (203°F)

[a] A handle, knob, or the like, made of a material other than metal that is plated or clad with metal having a thickness of 0.127 mm (0.005 inch) or less, is considered to be, and is judged as, a nonmetallic part.

48 Resistance to Arcing Test

48.1 If a material, other than porcelain or ceramic, is used in the construction of the face of a device having female contacts in a way that the material is likely to be exposed to arcing (that is, making and/or breaking under load) while in service, each of the three devices that were subjected to 50 cycles of operation described in the Overload Test, 43, shall perform acceptably when subjected to an additional 200 cycles of operation under the overload-test conditions following the temperature test. There shall not be any electrical tracking, formation of a permanent carbon conductive path, or ignition of the material. The mating device (without female contacts) used for this test can be changed after every 50 operations. If a contact failure occurs after the first 50 operations, the contact can be replaced to permit the remainder of the test operations to be completed.

48.2 Alternatively, one set of devices can be subjected to the 50 cycles of operation described in the Overload Test, 43, followed by the temperature test on the devices, and then, to determine resistance to arcing, a second, previously untested set of devices can be subjected to 250 cycles of operation under the overload-test conditions.

49 Polarization Integrity Test

49.1 Compliance with the requirements specified in 14.10 shall be determined by using each of three devices assembled in its intended housing with the polarization feature removed. The devices shall not be able to mate in any manner that would energize the grounding feature of the device with the application of a force of 180 N (40 lbf).

50 Resistance to Corrosion Test

50.1 After being tested as described in 50.2 – 50.6, ferrous parts, including enclosures, of three devices, shall not show evidence of corrosion.

50.2 All grease shall be removed from the parts to be tested, by immersion in either ethyl acetate, acetone, or methylethyl ketone for 10 minutes. The parts shall then be immersed for 10 minutes in a 10 percent solution of ammonium chloride in water at a temperature of 20 ±5°C (68 ±9°F).

Single User - Hard Copy || Purchased by Bauth Verlag From SAI Global - ILI Publishing on 6/16/2014 8:38:39 AM || ALL RIGHTS RESERVED

UL COPYRIGHTED MATERIAL –
NOT AUTHORIZED FOR FURTHER REPRODUCTION OR
DISTRIBUTION WITHOUT PERMISSION FROM UL

50.3 Without drying, but after shaking off any excess drops by hand, the parts shall then be placed for 10 minutes in a chamber containing moisture-saturated air at a temperature of 20 ±5 °C (68 ±9°F).

50.4 The parts shall then be dried for 10 minutes in a heating cabinet at a temperature of 100 ±5°C (212 ±9°F), and their surfaces shall not show any signs of rust.

50.5 Traces of rust on sharp edges and yellowish film removable by rubbing shall be ignored.

50.6 Small helical springs and the like, and inaccessible parts exposed to abrasion, shall be considered protected against corrosion by a coating of grease. Such parts shall be tested only when the effectiveness of the grease film is in doubt, and the test shall then be made without previous removal of the grease.

51 Vibration Test

51.1 Each of three vehicle inlets intended to be permanently mounted in a vehicle or transported on a vehicle shall not emit flame or molten metal or result in a risk of fire, electric shock, or injury to persons (see 51.2) when subjected to the tests specified in 51.3 and 51.4. Separate representative devices can be used for conducting these tests.

51.2 A risk of fire, electric shock, or injury to persons is considered to exist if:

a) Flame or molten metal is emitted from the enclosure of the unit, as evidenced by ignition, glowing, or charring of the cheesecloth or tissue paper, or

b) The insulation breaks down when tested in accordance with the Dielectric Withstand Test, 30, or live parts are made accessible (see Accessibility of Live Parts, 13).

51.3 A vehicle inlet intended to be permanently mounted in a vehicle shall be mounted to the vibration fixture in accordance with the manufacturer's mounting instructions and shall be subjected to a vibration test. After the unit is subjected to the vibration test described in 51.4:

a) The unit shall comply with the requirement in 51.1,

b) There shall be no loosening of parts, and

c) The unit shall operate normally.

51.4 The vibration test shall consist of vibration for one hour at a frequency of 10 to 55 Hz and back to 10 Hz, with a linear sweep having a sweep time of two minutes per sweep cycle. The amplitude shall be 1.0 +0.1, −0 mm (0.040 +0.004, −0 inch) p-p displacement limit in a vertical plane.

52 Accelerated Aging Gasket Test

52.1 Gaskets depended upon for protection from rain made of neoprene or rubber compounds and solid polyvinyl-chloride materials, except foamed materials, shall have physical properties as indicated in Table 18 before and after the conditioning indicated in Table 19.

Single User - Hard Copy || Purchased by Bauth Verlag From SAI Global - ILI Publishing on 6/16/2014 6:38:30 AM || ALL RIGHTS RESERVED

UL COPYRIGHTED MATERIAL –
NOT AUTHORIZED FOR FURTHER REPRODUCTION OR
DISTRIBUTION WITHOUT PERMISSION FROM UL

Table 18
Physical properties for gaskets

Physical property[a]	Neoprene or rubber compound		Polyvinyl-chloride materials	
	Before conditioning	After conditioning	Before conditioning	After conditioning
Tensile Set Maximum set when 25.4 mm (1 inch) gage marks are stretched to 63.5 mm (2-1/2 inches), held for 2 minutes and measured 2 minutes after release.	6.4 mm (1/4 inch)	–	Not Specified	
Elongation Minimum increase in distance between 25.4 mm (1 inch) gage marks at break.	250 percent [to 88.9 mm (3-1/2 inches)]	65 percent of original	250 percent [to 88.9 mm (3-1/2 inches)]	75 percent of original
Tensile Strength Minimum force at breaking point.	5.86 MPa (850 psi)	75 percent of original	8.27 MPa (1200 psi)	90 percent of original

[a] To be determined using the test methods and apparatus described in Annex A, Ref. No. 27, except the method for tensile set shall be as specified in this table.

Table 19
Conditioning parameters

Minimum material temperature rise[a] °C (°F)	Conditioning	
	Rubber or neoprene	Thermoplastic
35 (63)	70 hours in a circulating-air over at 100°C (212°F)	7 days in a circulating-air oven at 87°C (189°F)
50 (90)	7 days in a circulating-air oven at 100°C (212°F)	10 days in a circulating-air oven at 100°C (212°F)
55 (99)	7 days in a circulating-air oven at 113°C (235.4°F)	10 days in a circulating-air oven at 113°C (235.4°F)
65 (117)	10 days in a circulating-air oven at 121°C (249.8°F)	7 days at 121°C (249.8°F) or 60 days at 97°C (206°F) in a circulating-air oven

[a] Measured during the Temperature Rise Test, 45.

52.2 Gaskets of foamed materials shall be placed in an air-circulating oven maintained at a temperature of at least 10°C (18°F) higher than the maximum temperature of the gasket measured during the temperature test described in the Temperature Rise Test, 45, but not less than 70°C (158°F), for 168 hours. After conditioning the material shall have a tensile strength of not less than 75 percent and an elongation of not less than 60 percent of the values determined for unaged samples. There shall be no visible deterioration, deformation, melting, or cracking of the material, and the material shall not harden as determined by normal hand flexing.

Single User - Hard Copy Purchased by Beuth Verlag From SAI Global - ILI Publishing on 6/18/2014 8:39:39 AM ILI ALL RIGHTS RESERVED

UL COPYRIGHTED MATERIAL –
NOT AUTHORIZED FOR FURTHER REPRODUCTION OR
DISTRIBUTION WITHOUT PERMISSION FROM UL

53 Permanence of Marking Tests (Mexico and US)

53.1 Following the test described in 53.2 – 53.5, the marking shall be considered permanently affixed when there is no indication of the results shown in (a) – (d). Manipulation of the hang tag, such as straightening by hand, is allowed when determining compliance with these requirements.

a) Tearing at any point for more than 1/16 in (1.6 mm),

b) Movement of the tag more than 1/2 in (12.7 mm) along the length of the cable,

c) Shrinkage, wrinkling, cracking, or other deformation that renders the marking illegible, or

d) Visible curling or loosening around the edges of a tag with an adhesive back.

53.2 Nine samples of a hang tag shall be tested as described in 53.5. Each sample shall consist of a length of cable to which the hang tag has been attached in the intended manner. If the hang tag is secured by an adhesive, the test shall be conducted no sooner than 24 h after application of the hang tag. Three samples shall be tested as received; the additional samples shall be conditioned as described in 53.3 and 53.4 prior to testing.

53.3 Three samples shall be conditioned for 240 h in an air-circulating oven maintained at a uniform temperature of 87.0 ±1.0°C (188.6 ±1.8°F). Following removal from the oven, the samples shall remain at a temperature of 23.0 ±2.0°C (73.4 ±3.6°F) and a relative humidity of 50 ±5 percent for 30 min before testing.

53.4 Three additional samples shall be conditioned for 72 h at a temperature of 32.0 ±2.0°C (89.6 ±3.6°F) and a relative humidity of 85 ±5 percent. The samples shall be tested within 1 min after exposure.

53.5 Each sample cable with attached hang tag shall be tightly suspended and clamped at each end in a vertical plane with the attachment plug on a cord pointing upward. A 5-lb (22.2-N) force shall be applied for 1 min at the uppermost corner of the tag farthest from the cable and within 1/4 in (6.4 mm) of the vertical edge of the hang tag. The force shall be applied vertically downward in a direction parallel to the major axis of the cable.

54 Enclosure Tests for Environmental Protection

54.1 A device and its enclosure shall be subjected to the tests specified in Table 20 based on the manufacturer's type rating of the enclosure and its intended use. See Annex A, Ref. No. 28, for test descriptions. See 56.12.1 – 56.12.6 for marking requirements.

Single User - Hard Copy || Purchased by Beuth Verlag From SAI Global - ILI Publishing on 8/16/2014 8:39:39 AM || ALL RIGHTS RESERVED

UL COPYRIGHTED MATERIAL –
NOT AUTHORIZED FOR FURTHER REPRODUCTION OR
DISTRIBUTION WITHOUT PERMISSION FROM UL

Table 20
Enclosure types and tests

Designation	Intended use and description	Requirement or qualification tests[a]
1	Indoor use primarily to provide a degree of protection against a limited amount of falling dirt.	Corrosion protection or rust resistance.
2	Indoor use primarily to provide a degree of protection against limited amounts of falling water and dirt.	Drip, gasket aging, and rust resistance or corrosion protection.
3	Outdoor use primarily to provide a degree of protection against rain, sleet, windblown dust, and damage from external ice formation.	Rain, icing, protective coating, gasket aging, and outdoor dust or hose.
3R	Outdoor use primarily to provide a degree of protection against rain, sleet, and damage from external ice formation.	Rain, icing, protective coating, and gasket aging.
3S	Outdoor use primarily to provide a degree of protection against rain, sleet, and windblown dust and to provide for operation of external mechanisms when ice laden.	Rain, icing, protective coating, gasket aging, and outdoor dust or hose.
4	Indoor or outdoor use primarily to provide a degree of protection against windblown dust and rain, splashing water, hose-directed water, and damage from external ice formation.	Hosedown, icing, protective coating, and gasket aging.
4X	Indoor or outdoor use primarily to provide a degree of protection against corrosion, windblown dust and rain, splashing water, hose-directed water, and damage from external ice formation.	Hosedown, icing, protective coating, corrosion resistance, and gasket aging.
5	Indoor use primarily to provide a degree of protection against settling airborne dust, falling dirt, and dripping noncorrosive liquids.	Corrosion protection or rust resistance, drip, indoor settling airborne dust or atomized water Method B, and gasket aging.
6	Indoor or outdoor use primarily to provide a degree of protection against hose-directed water, and the entry of water during occasional temporary submersion at a limited depth and damage from external ice formation.	Hosedown, icing, submersion, protective coating, and gasket aging.
6P	Indoor or outdoor use primarily to provide a degree of protection against hose-directed water, the entry of water during prolonged submersion at a limited depth, and damage from external ice formation.	Hosedown, icing, air pressure, protective coating, and gasket aging.
12, 12K	Indoor use primarily to provide a degree of protection against circulating dust, falling dirt, and dripping noncorrosive liquids.	Corrosion protection or drip, indoor circulating airborne dust or atomized water Method A, and gasket aging and oil immersion.
13	Indoor use primarily to provide a degree of protection against dust, spraying of water, oil, and noncorrosive liquids.	Corrosion protection or rust resistance, oil, and gasket aging and oil immersion.

[a] For a description of tests, see Annex A, Ref. No. 28.

54.2 When a panel mounted device is tested, it shall be mounted on a panel of the appropriate enclosure type, in accordance with the manufacturer's instructions.

UL COPYRIGHTED MATERIAL –
NOT AUTHORIZED FOR FURTHER REPRODUCTION OR
DISTRIBUTION WITHOUT PERMISSION FROM UL

Single User - Hard Copy || Purchased by Beuth Verlag From SAI Global - ILI Publishing on 8/19/2014 8:39:39 AM || ALL RIGHTS RESERVED

54.3 Each of two devices shall be tested. One device shall be tested when coupled to its mating device (that is, a plug with a receptacle or a vehicle connector with a vehicle inlet). The second device shall be tested uncoupled, in its stored position, with all self-closing covers, doors, caps, and the like, in the closed position.

RATINGS

55 General

55.1 Devices shall be rated in amperes and in volts, ac or dc, or both. A device is permitted to have multiple voltage and current ratings unless designed for a single voltage and current rating.

55.2 The electrical rating of a plug and vehicle connector shall correspond to the rating of the receptacle and vehicle inlet, respectively, that is intended for use with the plug or vehicle connector.

55.3 If a device includes a snap switch that controls an outlet, the overall rating of the device shall not be higher that the rating of the switch.

55.4 A device shall be rated for disconnecting use only, not for current interrupting, if the potential rating is higher than 250 V dc. A device shall be rated for disconnecting use only, not for current interrupting, if current rating is greater than 60 A ac, dc, or ac-dc.

MARKINGS

Advisory Note: In Canada, there are two official languages, English and French, and in Mexico, the official language is Spanish. Annex C provides translations in French and Spanish of the English markings specified in this Standard. Markings required by this Standard may have to be provided in other languages to conform with the language requirements of the country where the product is to be used.

56 General

56.1 Company name, catalog designation, electrical rating

56.1.1 A device shall be legibly and permanently marked, where readily visible after installation, with:

a) The manufacturer's name, trade name, or trademark or other descriptive marking by which the organization responsible for the device is able to be identified. The manufacturer's identification is permitted to be in a traceable code if the device is identified by the brand or trademark owned by a private labeler;

b) The catalog number or an equivalent designation, where practicable. If the product is too small, or where legibility would be difficult to attain to include the complete catalog designation or an equivalent designation, or where several catalog numbers use common parts, the complete designation shall appear on the unit container;

c) The electrical rating in both volts and amperes;

d) In Canada and the US, the horsepower rating and associated electrical rating (such as voltage and no. of phases), if so rated.

In Mexico, kW rating shall be marked;

e) Whether ac or dc or both, see 56.5.

UL COPYRIGHTED MATERIAL –
NOT AUTHORIZED FOR FURTHER REPRODUCTION OR
DISTRIBUTION WITHOUT PERMISSION FROM UL

Single User - Hard Copy || Purchased by Benin Verlag From SAI Global - ILI Publishing on 6/10/2014 6:38:39 AM || ALL RIGHTS RESERVED

In Mexico, the symbols ∿ or "c.a." for AC, the symbol ⎓ or "c.d." for DC, or both, as applicable, shall be used. In Canada and the US, the additional use of symbols is optional;

f) For devices incorporating either fuses or circuit breakers, the interrupting rating in amperes;

g) Ambient temperature rating, if higher than 40°C (104°F);

h) If intended for a specific location, the type of location in which the device is intended to be used; and

i) For breakaway couplings, the separation force rating.

56.1.2 Unless a device is provided with a specific cable, the device shall be marked with the intended cable types, conductor size or sizes, total number of conductors, and the overall cord diameter. The marking may appear on the smallest unit shipping carton, on an instruction sheet provided in the carton, or on the device.

56.1.3 In Mexico and the US, if the device is rated 100 A or less and is intended for use with conductors having 75°C (167°F) insulation, the device shall be marked with the temperature rating of the insulation. No marking is required if the device is furnished with a specific cable.

In Canada, if the device is rated 100 A or less and designed for use with conductors having other than 60°C (140°F) insulation, the device shall be marked with the temperature rating of the insulation. No marking is required if the device is furnished with a specific cable.

56.1.4 If a device is intended for use with conductors having a temperature rating higher than 60°C (140°F) but is intended to be used based on 60°C (140°F) ampacities, the minimum conductor size shall be indicated on the device and on the smallest unit shipping carton, or on an instruction sheet provided in the carton. No marking is required if the device is furnished with a specific cable.

56.1.5 A marking that is required to be permanent shall be molded, die-stamped, paint-stenciled, stamped, or etched metal that is permanently secured, or indelibly stamped lettering on a pressure-sensitive label that complies with the requirements in Annex A, Ref. No. 29. Expected usage, handling, storage, and the like, of a product shall be considered in the determination of the permanence of marking.

56.1.6 In Mexico and the US, in addition to complying with the requirement in 56.1.5, a hang tag shall also meet the requirements in 53.1 – 53.5. In Canada, this requirements does not apply.

Single User - Hard Copy || Purchased by Beuth Verlag From SAI Global - ILI Publishing on 8/16/2014 8:38:39 AM || ALL RIGHTS RESERVED

UL COPYRIGHTED MATERIAL –
NOT AUTHORIZED FOR FURTHER REPRODUCTION OR
DISTRIBUTION WITHOUT PERMISSION FROM UL

56.2 Multiple factories

56.2.1 If a manufacturer produces or assembles devices at more than one factory, each finished device shall have a distinctive marking on the device, that can be in code, by which the device is capable of being identified as the product of a particular factory.

56.3 Nonconductive mounting means

56.3.1 In Mexico and the US, the receptacle or a flanged vehicle inlet described in 14.4 shall be plainly marked on the device where visible during installation as follows: "CAUTION - Mounting means not grounded. Grounding wire connection required" or an equivalent wording following the word "CAUTION".

In Canada, this marking does not apply.

56.4 Disconnecting use only

56.4.1 A device intended exclusively for disconnecting use shall be marked "CAUTION - Risk of Electric Shock, Do Not Disconnect Under Load", or "Not for current interrupting," or an equivalent statement following the word "CAUTION".

56.5 AC only devices

56.5.1 A wiring device that is intended for use on alternating current circuits only shall be identified as such by means of the letters "AC", or "AC Only", or an acceptable frequency marking (for example, "60 Hz"), or a phase marking, which shall be a part of the electrical rating. For multiphase devices that are intended for use only on a Wye system, the marking shall include the word "Wye," or the equivalent.

56.6 Cover grounded devices

56.6.1 An armored attachment plug, vehicle connector, or breakaway coupling in which the armor is conductively connected to the grounding pin, blade, or contact shall be marked on the device "cover grounded" or with an equivalent statement unless the grounding connection is readily visible.

56.7 Fused devices

56.7.1 A device intended to accommodate fuses, other than a plug or cartridge fuse acceptable for branch circuit protection, shall be marked "Use only with a ___ volt fuse." The potential to be used in the marking shall be the potential rating of the fuse for which the device is intended.

56.7.2 A plug, vehicle connector, or breakaway coupling that is intended to accommodate fuses that are capable of being removed after the plug or vehicle connector has been inserted in a receptacle or vehicle inlet, or after the breakaway coupling is connected, shall be marked "Disconnect power before replacing fuses" or an equivalent wording. See 21.1 and 21.4.

Single User - Hard Copy || Purchased by Beuth Verlag From SAI Global - ILI Publishing on 6/18/2014 8:38:39 AM || ALL RIGHTS RESERVED

UL COPYRIGHTED MATERIAL –
NOT AUTHORIZED FOR FURTHER REPRODUCTION OR
DISTRIBUTION WITHOUT PERMISSION FROM UL

56.8 Locking-type devices

56.8.1 A plug or vehicle connector that is required to be given a twisting or turning motion to lock or unlock it after the contacts have been inserted into the mating device, and the mating device intended to accommodate such a plug or vehicle connector, shall be marked on the device "Turn and pull" or an equivalent wording. The marking shall be visible while the device is in use.

56.9 Receptacle marking location

56.9.1 The markings required in 56.1.1, and 56.5.1 shall appear on the front of the body of a receptacle intended for use with a separate flush plate, and shall be readily visible on the outside of a receptacle mounted on a metal outlet-box cover.

56.10 Wiring information – field wiring terminals

56.10.1 A device intended for field wiring shall be marked with the value of tightening torque assigned in accordance with 17.9. The value of tightening torque assigned shall be marked where readily visible:

a) On the device,

b) On the smallest unit container, or

c) On an information sheet packed in the smallest unit container.

56.10.2 If field wiring terminals employing solder connections are intended for solid or tinned stranded conductors only, instructions regarding the use of solid wire, pretinned stranded wire, or the tinning of stranded wire, shall be marked where readily visible:

a) On the device,

b) On the smallest unit container, or

c) On an information sheet packed in the smallest unit container.

56.10.3 Except when a device is so constructed that the factory installed bond between the terminal and exposed non-current-carrying metal parts is readily visible and the terminal for the connection of the grounding conductor is obvious, the terminal for the connection of an equipment grounding conductor shall have a permanent identification that is readily recognizable during installation.

56.10.4 The wire entrance hole for a grounding terminal shall be identified by a distinct green colored area immediately adjacent to the entrance hole. Additionally, the marking "G", "GR", or "GROUND" or the symbol ⏚ is permitted to appear adjacent to the wire entrance hole.

56.10.5 A readily removable part of an equipment grounding terminal, such as a set screw or a clamp, shall not be colored green or otherwise identified as part of the grounding terminal, if such a part is able to be interchanged with a similar part of another terminal on the device.

Single User - Hard Copy || Purchased by Beuth Verlag From SAI Global - CL Publishing on 6/10/2014 8:38:39 AM || ALL RIGHTS RESERVED

UL COPYRIGHTED MATERIAL –
NOT AUTHORIZED FOR FURTHER REPRODUCTION OR
DISTRIBUTION WITHOUT PERMISSION FROM UL

56.10.6 An equipment grounding conductor shall be green or green with one or more yellow stripes, and no other lead shall be so coded.

56.11 Overcurrent protection

56.11.1 A device contactor rated over 1.2 kW shall be marked "Suitable For Use On A Circuit Capable Of Delivering Not More Than _____ rms Symmetrical Amperes, _____ Volts Maximum." The ampere rating shall not be more than the value for which the device was tested in accordance with Table 13.

a) If tested with a time delay fuse in accordance with Table 12, the marking shall also include the following or the equivalent:

"When Protected by Time Delay _____ Class Fuses"

b) If tested in accordance with 39.2.2, part A, the marking shall also include the following or the equivalent:

"When Protected by a Circuit Breaker Having an Interrupting Rating Not Less Than _____ rms Symmetrical Amperes, _____ Volts Maximum".

56.12 Environmental enclosures

56.12.1 A device enclosure type designation marking shall be one of those specified in Table 20. The marking shall be visible after installation and shall be permanent for plugs, vehicle connectors, and breakaway couplings. The marking is not required to be visible after installation on receptacles or vehicle inlets when these devices are installed behind covers within additional enclosures. See 56.12.7 and 56.12.8.

56.12.2 If a device enclosure has been evaluated as a specific enclosure type in accordance with the requirements for enclosures in Annex A, Ref. No. 30, the enclosure may be marked with the appropriate IP code designation. If so marked, the marking shall be visible after installation and shall be permanent for plugs, vehicle connectors, and breakaway couplings. The marking is not required to be visible after installation on receptacles or vehicle inlets when these devices are installed behind covers within additional enclosures. See 56.12.7 and 56.12.8.

56.12.3 An enclosure that complies with the requirements for more than one type of enclosure is permitted to be marked with multiple designations.

56.12.4 Device enclosures are permitted to be provided with the following additional markings:

a) A Type 4, 4X, 6 or 6P enclosure is permitted to be marked "Watertight", or

b) A Type 4X or 6P enclosure is permitted to be marked "Corrosion Resistant".

56.12.5 If the acceptability of a rating for a device is dependent upon a particular mounting orientation, the device shall be marked to indicate the required orientation.

Single User - Hard Copy || Purchased by Beuth Verlag From SAI Global - ILI Publishing on 6/10/2014 8:33:39 AM || ALL RIGHTS RESERVED

UL COPYRIGHTED MATERIAL –
NOT AUTHORIZED FOR FURTHER REPRODUCTION OR
DISTRIBUTION WITHOUT PERMISSION FROM UL

56.12.6 A device that provides enclosure protection shall be legibly marked where visible during intended use, "To maintain enclosure rating, use only with a device with identical marking (specific identification) _____" or the equivalent.

56.12.7 A marking identifying an environmental enclosure type or types shall be molded, die-stamped, paint-stenciled, stamped, or etched metal that is permanently secured, or indelibly applied lettering on a label secured by adhesive that, upon investigation, is found to be acceptable for the application. Ordinary usage, including likely exposure to weather and other ambient conditions, handling, storage, and the like, of the equipment shall be considered in the determination of the acceptability of the application.

56.12.8 A pressure-sensitive label or a label secured by cement or adhesive shall comply with the applicable requirements for indoor or outdoor use labels in Annex A, Ref. No. 29.

56.13 HB flammability use marking (Canada only)

56.13.1 A connector that has an enclosure formed of a material with a flammability rating of HB shall be marked "For use in portable EV Cord Sets only." This marking may appear on the packaging.

56.14 EV cable assembly markings

56.14.1 The following marking shall be permanent and legible and it shall be located on a permanent part of the product. The marking shall be visible during intended operation.

56.14.2 EV cable assemblies shall be marked with the following or equivalent statement after the word "Caution", "Do not use this product if there is any damage to the EV cable, the plug, or the EV connector."

57 Identification and Marking of Terminals

57.1 General

57.1.1 Wiring terminals shall be marked to indicate the proper connections for the power supply, load, control circuit, and the like, or a wiring diagram coded to the terminal marking shall be provided with the product.

57.2 Grounded and grounding

57.2.1 Device wiring terminals designated "W" (white) intended for connection to grounded circuit conductors, or designated "G" (green) for grounding conductors, shall be clearly and permanently identified on the device in accordance with Table 21 or 22. The colors or markings specified for this terminal identification shall not be applied to other than the designated terminals. The identifications shall be readily recognizable during wiring and relate directly to the appropriate terminals.

Single User - Hard Copy || Purchased by Barth Verlag From SAI Global - IEJ Publishing on 8/16/2014 6:38:39 AM || ALL RIGHTS RESERVED

UL COPYRIGHTED MATERIAL –
NOT AUTHORIZED FOR FURTHER REPRODUCTION OR
DISTRIBUTION WITHOUT PERMISSION FROM UL

Table 21
Identification of wiring terminals

Identification by:	Grounded terminal	Grounding terminal	All other terminals
Wire-binding screw	White metal or plating	Hexagonal, green-colored nut[b] or slotted screw head[b]b	Other than white or green circular screw head
Pressure wire terminal-visible	White metal or plating on terminal	Green-colored terminal or appendage[b]	Other than white or green-colored terminal
Pressure wire terminal-concealed	Distinct white-colored area adjacent to wire entrance hole, or the word "white" distinctively marked adjacent to wire entrance hole	Distinct green-colored area adjacent to wire entrance hole, or the word "green" or "ground", the letters "G" or "GR"[c] or the grounding symbol shown in Figure 4 distinctively marked adjacent to wire entrance hole	Other than white or green area adjacent to wire entrance hole
Set screw	Distinct white-colored area adjacent to wire entrance hole, or the word "white" distinctively marked adjacent to wire entrance hole	Distinct green-colored area adjacent to wire entrance hole, or the word "green" or "ground", the letters "G" or "GR",[c] or the grounding symbol shown in Figure 4 distinctively marked adjacent to wire entrance hole	Other than white or green area adjacent to wire entrance hole
Terminal plate[a]	White metal or plating	–	Other than white or green metal or plating
Insulating enclosure or terminal	The word "white" marked on or directly adjacent to terminal, or white metal or plating on terminal	The word "green" or "ground", the letters "G" or "GR", or the grounding symbol shown in Figure 4 marked on or directly adjacent to terminal, or green colored terminal	Other than white or green-colored terminal

[a] Only if all line-terminal binding screws are of the same color.

[b] Not readily removable. See 56.10.5.

[c] In letters at least 1.6 mm (1/16 inch) high.

Single User - Hard Copy Purchased by Barth Verlag From SAI Global - ULI Publishing on 8/16/2014 8:38:39 AM ULI ALL RIGHTS RESERVED

UL COPYRIGHTED MATERIAL –
NOT AUTHORIZED FOR FURTHER REPRODUCTION OR
DISTRIBUTION WITHOUT PERMISSION FROM UL

Figure 4
Grounding symbol

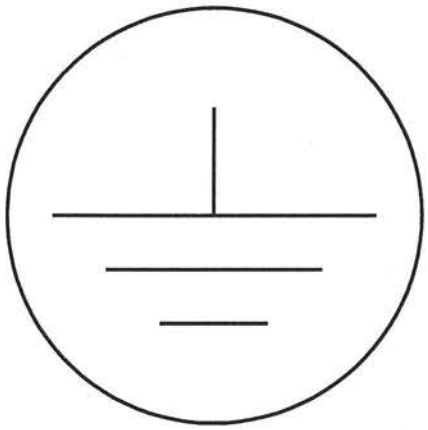

GND1

Table 22
Identification of leads

Identification by:	Grounded conductor	Grounding conductor	All other conductors
Color of braid[b]	Solid white or grey (without trace)	Not applicable	White or grey with tracer in braid or solid color other than white, grey, or green[a] (without tracer)
	Color other than white, grey or green, with tracer in braid	Not applicable	Solid color other than white, grey, or green[a] (without tracer)
Color of insulation[b]	Solid white or grey; stripe, white or grey, on contrasting color other than green	Green with or without one or more yellow stripes	Solid color other than white, grey, or green[a]
Color of separator[b]	Solid white or grey	Not applicable	Solid color other than white, grey or green[a]
Conductor tinning[c]	Tin or other acceptable metal on all strands of the conductor	Not applicable	No tin or other white metal on the strands of the conductor

[a] A green wire, with or without one or more yellow stripes, shall be used only as an equipment grounding conductor.
[b] If color of braid, insulation, or separator is used for identification, all conductors shall be either tinned or not tinned.
[c] If conductor tinning is used for identification, all braids and/or insulation shall have the same color and shape.

Single User - Hard Copy Purchased by Booth Varley From SAI Global - ILI Publishing on 8/10/2014 8:39:39 AM || ALL RIGHTS RESERVED

UL COPYRIGHTED MATERIAL –
NOT AUTHORIZED FOR FURTHER REPRODUCTION OR
DISTRIBUTION WITHOUT PERMISSION FROM UL

57.2.2 A part relied upon to provide the terminal identification required in 57.2.1 shall not be readily removable if it is capable of being replaced with a similar part of another wiring terminal of the device. A suitably staked terminal screw is considered to be not readily removable for this purpose. A surface of a permanent appendage to a wiring terminal can be used to mark the terminal identification.

57.3 Other terminals

57.3.1 Device wiring terminals other than the grounded and grounding terminals described in 57.2.1 need not be identified, but if they are, the letters "X", "Y", and "Z" or other recognized marking conventions shall be used for identification according to the following convention:

a) Viewing the pin end of the plug and proceeding counter-clockwise starting from the grounding pin (G), or in the absence of a grounding pin, the grounded pin (W), the terminals shall be marked in sequence "X", "Y" and "Z". Other recognized marking conventions can be used provided they are identical to the convention used on the mating device.

b) Viewing the face end of the receptacle and proceeding clockwise, starting from the grounding contact slot (G), or in the absence of a grounding contact slot, the grounded contact slot (W), the terminals shall be marked in sequence "X", "Y" and "Z". Other recognized marking conventions can be used provided they are identical to the convention used on the mating device.

Single User - Hard Copy || Purchased by Beuth Verlag From SAI Global - ILI Publishing on 6/16/2014 8:38:39 AM || ALL RIGHTS RESERVED

UL COPYRIGHTED MATERIAL –
NOT AUTHORIZED FOR FURTHER REPRODUCTION OR
DISTRIBUTION WITHOUT PERMISSION FROM UL

Annex A – Reference Standards
(Normative)

Ref. No.	Clause No.	Canada	Mexico	US
1	1.1 17.1	CSA C22.1–12 Canadian Electrical Code (CEC), Part 1	NOM-001-SEDE Electrical installations (Utility)	ANSI/NFPA 70 National Electrical Code (NEC)
2	1.2	CSA C22.2 No. 21–95 (R1999) Cord Sets and Power Supply Cords	NMX-J-195-ANCE Power supply cords and extension cord sets for electrical appliances – Specifications and test methods	UL 817 Cord Sets and Power-Supply Cords
3	1.2	CSA C22.2 No, 42–10 General Use Receptacles, Attachment Plugs, and Similar Wiring Devices	NMX-J-412-ANCE Attachment plugs and receptacles – General specifications and test methods	UL 498 Attachment Plugs and Receptacles,
4	1.2	CSA C22.2 182.3–M1987 Special Use Attachment Plugs, Receptacles, and Connectors	No equivalent	UL 1977 Standard for Component Connectors for Use in Data, Signal, Control and Power Applications
5	1.2	CSA C22.2 No. 182.1–07 Plugs, Receptacles, and Cable Connectors of the Pin and Sleeve Type	No equivalent	UL 1682 Plugs, Receptacles, and Cable Connectors of the Pin and Sleeve Type
6	1.2	No equivalent	No equivalent	UL 1203 Explosion-Proof and Dust-Ignition-Proof Electrical Equipment for Use in Hazardous (Classified) Locations
7	1.2	CSA C22.2 No. 158–10 Terminal Blocks	No equivalent	UL 1059 Terminal Blocks
8	1.2	CAN/CSA C22.2 No. 225–M90 Telecommunications Equipment	No equivalent	UL 1459 Telephone Equipment
9	1.2	CAN/CSA - C22.2 No. 182.4 –M90 Plugs, Receptacles, and Connectors for Communication Systems	No equivalent	UL 1863 Communications Circuit Accessories
10	1.2 17.9	CAN/CSA - C22.2 No. 65–03 Wire Connectors	NMX-J-543-ANCE Connectors – Wire connectors – Specifications and test methods	UL 486A-486B Wire Connectors
11	1.2	CAN/CSA - C22.2 No. 188–04 Splicing Wire Connectors	NMX-J-548-ANCE Connectors – Splicing wire connectors – Specifications and test methods	UL 486C Splicing Wire Connectors
12	1.2 17.2 17.8 17.9 38.2 40.3	CAN/CSA - C22.2 No. 65–03 Wire Connectors	No equivalent	UL 486E Equipment Wiring Terminals for Use with Aluminum and/or Copper Conductors

UL COPYRIGHTED MATERIAL –
NOT AUTHORIZED FOR FURTHER REPRODUCTION OR
DISTRIBUTION WITHOUT PERMISSION FROM UL

Table Continued on Next Page

Single User - Hard Copy || Purchased by Beuth Verlag From SAI Global - ILI Publishing on 6/16/2014 8:38:39 AM || ALL RIGHTS RESERVED

Table Continued

Ref. No.	Clause No.	Canada	Mexico	US
13	1.2	CSA C22.2 No. 153–09 Electrical Quick-Connect Terminals	No equivalent	UL 310 Electrical Quick-Connect Terminals
14	1.2	CSA C22.2 No. 29–11 Panelboards and Enclosed Panelboards	NMX-J-118/1-ANCE Electrical products – Panelboards – Specifications and test methods	UL 231 Power Outlets
15	1.2 15	CSA C22.2 No.14–10 Industrial Control Equipment	NMX-J-515-ANCE Distribution and control equipment – Safety general requirements – Specifications and test methods	UL 508 Industrial Control Equipment
16	7.3	SAE J1772 Society of Automotive Engineers Recommended Practice for Electric Vehicle and Plug-In Hybrid Electric Vehicle Conductive Charge Coupler	No equivalent	SAE J1772 Society of Automotive Engineers Recommended Practice for Electric Vehicle and Plug-In Hybrid Electric Vehicle Conductive Charge Coupler
17	8.1.3 1 21.7	CAN/CSA - C22.2 No. 0.17–00 (R2009) Evaluation of Properties of Polymeric Materials	NMX-J-565/3-ANCE Safety requirements – Flammability of plastic materials for parts in devices and appliances – Test methods	UL 94 Tests for Flammability of Plastic Materials for Parts in Devices and Appliances
18	8.2.1 1 10.3.5 27.4 6	CAN/CSA - C22.2 No. 0.17–00 (R2009) Evaluation of Properties of Polymeric Materials	NMX-J-574-ANCE Method for the determination of the proof and the comparative tracking indices of solid insulating materials NMX-J-565/2-10-ANCE Fire hazard testing – Part 2-10: Glowing/hot – Wire based test methods – Glow wire apparatus and common test procedure NMX-J-565/7-ANCE Safety requirements – High-current arc resistance to ignition – Test method	ASTM D570 described in UL 746A Polymeric Materials – Short Term Property Evaluations
19	2	CAN/CSA - C22.2 No. 0.17–00 (R2009) Evaluation of Polymeric Materials	No equivalent	UL 746B Polymeric Materials – Long Term Property Evaluations
20	10.3.2 10.3.4 6	CAN/CSA - C22.2 No. 0.17–00 (R2009) Evaluation of Properties of Polymeric Materials	NMX-J-553-ANCE Wires and cables – Weather resistance of insulation or jacket of electrical conductors – Test method	UL 746C Polymeric Materials -- Use in Electrical Equipment Evaluations
21	12.2 12.3 12.5 12.9	CSA C22.2 No. 0.2–93 (R2008) Insulation Coordination	NMX-J-597/1-ANCE Insulation coordination for equipment within low voltage systems – Part 1: Principles, requirements and tests	UL 840 Insulation Coordination Including Clearances and Creepage Distances for Electrical Equipment

UL COPYRIGHTED MATERIAL –
NOT AUTHORIZED FOR FURTHER REPRODUCTION OR
DISTRIBUTION WITHOUT PERMISSION FROM UL

Table Continued on Next Page

Single User - Hard Copy || Purchased by Beuth Verlag From SAI Global - IEJ Publishing on 8/16/2014 8:38:39 AM || ALL RIGHTS RESERVED

Table Continued

Ref. No.	Clause No.	Canada	Mexico	US
22	21.2 46.6	CSA C22.2 No. 39–M1987 Fuseholder Assemblies	NMX-J-009/4248-ANCE Series of Standards for Fuseholders	UL 4248 Series of Standards for Fuseholders
23	23.2	No equivalent	No equivalent	UL 1439 Tests for Sharpness of Edges on Equipment
24	39.3.3.2	ANSI/IEEE C37.09 Test Procedure for AC High-Voltage Circuit Breakers Rated on a Symmetrical Current Basis	No equivalent	ANSI/IEEE C37.09 Test Procedure for AC High-Voltage Circuit Breakers Rated on a Symmetrical Current Basis
25	15	ANSI/NEMA ICS2 Section 125 of Controllers, Contactors and Overload Relays Rated 600 Volts	No equivalent	ANSI/NEMA ICS2 Section 125 of Controllers, Contactors and Overload Relays Rated 600 Volts
26	46.6	CAN/CSA - C22.2 No. 39 Fuseholder Assemblies CAN/CSA - C22.2 No. 4248.1–07 Fuseholders – Part 1: General Requirements CAN/CSA - C22.2 No. 4248.4–07 Fuseholders – Part 4: Class CC CAN/CSA - C22.2 No. 4248.5–07 Fuseholders – Part 5: Class G CAN/CSA - C22.2 No. 4248.6–07 Fuseholders – Part 6: Class H CAN/CSA - C22.2 No. 4248.8–07 Fuseholders – Part 8: Class J CAN/CSA - C22.2 No. 4248.9–07Fuseholders – Part 9: Class K CAN/CSA - C22.2 No. 4248.11–07Fuseholders – Part 11: Type C (Edison Base) and Type S Plug Fuse CAN/CSA - C22.2 No. 4248.12–07Fuseholders – Part 12: Class R CAN/CSA - C22.2 No. 4248.15–07Fuseholders – Part 15: Class T	NMX-J-009/4248-ANCE Series: NMX-J-009/4248/1-ANCE Low voltage fuseholders – Part 1: General requirements NMX-J-009/4248/4-ANCE Low voltage fuseholders – Part 4: Fuseholders class CC NMX-J-009/4248/5-ANCE Low voltage fuseholders – Part 5: Fuseholders class G NMX-J-009/4248/6-ANCE Low voltage fuseholders – Part 6: Fuseholders class H NMX-J-009/4248/8-ANCE Low voltage fuseholders – Part 8: Fuseholders class J NMX-J-009/4248/9-ANCE Low voltage fuseholders – Part 9: Fuseholders class K NMX-J-009/4248/12-ANCE Low voltage fuseholders – Part 12: Fuseholders class R NMX-J-009/4248/15-ANCE Low voltage fuseholders – Part 15: Fuseholders class T	UL 4248 Series: UL 4248-1 Fuseholders - Part 1: General Requirements UL 4248-4 Fuseholders – Part 4: Class CC UL 4248-5 Fuseholders – Part 5: Class G UL 4248-6 Fuseholders – Part 6: Class H UL 4248-8 Fuseholders – Part 8: Class J UL 4248-9 Fuseholders – Part 9: Class K UL 4248-11 Fuseholders – Part 11: Type C (Edison Base) and Type S Plug Fuse UL 4248-12 Fuseholders – Part 12: Class R UL 4248-15 Fuseholders – Part 15: Class T
27	18	ASTM D412 Standard Test Methods for Vulcanized Rubber and Thermoplastic Elastomers - Tension	NMX-J-178-ANCE Wires and cables – Ultimate strength and elongation of insulation, semiconducting shields and jackets of electrical conductors – Test method	ASTM D412 Standard Test Methods for Vulcanized Rubber and Thermoplastic Elastomers - Tension

Single User - Hard Copy || Purchased by Beuth Verlag From SAI Global - ILI Publishing on 6/16/2014 8:38:39 AM || ALL RIGHTS RESERVED

UL COPYRIGHTED MATERIAL –
NOT AUTHORIZED FOR FURTHER REPRODUCTION OR
DISTRIBUTION WITHOUT PERMISSION FROM UL

Table Continued on Next Page

Table Continued

Ref. No.	Clause No.	Canada	Mexico	US
28	54.1 20	CAN/CSA - C22.2 No. 94.2–07 Enclosures for Electrical Equipment – Environmental Considerations	NMX-J-235/2-ANCE Enclosures – Enclosures for electrical equipment – Part 2: Specific requirements – Specifications and test methods	UL 50E Enclosures for Electrical Equipment – Environmental Considerations
29	56.1.5 56.12.8	CSA C22.2 No. 0.15–01 (R2006) Adhesive Labels	No equivalent	UL 969 Marking and Labeling Systems
30	56.12.2	IEC 60529 Degrees of Protection Provided by Enclosures	NMX-J-529-ANCE Degrees of protection provided by enclosures (IP Code)	IEC 60529 Degrees of Protection Provided by Enclosures

Single User - Hard Copy || Purchased by Beuth Verlag From SAI Global - ILI Publishing on 6/10/2014 8:38:39 AM || ALL RIGHTS RESERVED

UL COPYRIGHTED MATERIAL –
NOT AUTHORIZED FOR FURTHER REPRODUCTION OR
DISTRIBUTION WITHOUT PERMISSION FROM UL

Annex B – French and Spanish Translations
(Informative)

B1 French and Spanish Translations

Clause	English	French	Spanish
56.3	CAUTION – Mounting means not grounded. Grounding wire connection required	ATTENTION – Dispositif de montage non mis à la terre. Connexion à la terre requise.	PRECAUCIÓN – Los medios de montaje no están puestos a tierra. Se requiere la conexión de un conductor para puesta a tierra
56.4.1	CAUTION – Risk of Electric Shock, Do Not Disconnect Under Load	ATTENTION – Risque de choc électrique. Ne pas débrancher sous charge.	PRECAUCIÓN – Riesgo de choque eléctrico. No desconectar con carga
56.4.1	Not for current interrupting	Ne peut servir à couper le courant	No utilizar para interrumpir la corriente
56.6.1	Cover grounded	Couvercle mis à la terre	Cubierta puesta a tierra
56.7.1	Use only with a ____ volt fuse	Utiliser uniquement avec un fusible de ____ V	Utilizar únicamente con un fusible de ___ V
56.7.2	Disconnect power before replacing fuses	Couper l'alimentation avant de remplacer les fusibles	Desconectar la alimentación antes de reemplazar los fusibles
56.8.1	Turn and pull	Tournez et tirez	Gire y jale
56.11	Suitable For Use On A Circuit Capable Of Delivering Not More Than _____ rms Symmetrical Amperes, _____ Volts Maximum	Convient à tout circuit pouvant acheminer au plus ____ A symétriques eff., ____ V max.	Adecuado para utilizarse en un circuito capaz de liberar no más que ___ A valor eficaz simétrico, ___ V máximo.
56.11.1 (a)	When Protected by Time Delay _____ Class Fuses	Si protégé par un fusible temporisé de _____	Cuando se protege con fusibles Clase ___ con retardo de tiempo
56.11.1 (b)	When Protected by a Circuit Breaker Having an Interupted Rating Not Less Than _____ rms Symmetrical Amperes, _____ Volts Maximum	Si protégé par un disjoncteur différentiel ayant un pouvoir de coupure non inférieur à _____ A symétriques eff., ____ V max.	Cuando se protege con un interruptor automático con valor nominal de interrupción no menor que ___ A valor eficaz simetrico, ___ V máximo
56.12.6	To maintain enclosure rating, use only with a device with identical marking (specific identification) _____	Pour protéger les caractéristiques nominales du boîtier, utiliser uniquement un dispositif arborant un marquage identique (identification spécifique)	Para mantener la designación del envolvente, utilícese únicamente con un dispositivo con marcado idéntico (designación) _____
56.13.1	For use in portable EV Cord Sets only	Pour cordons amovibles de VÉ uniquement	Para utilizarse únicamente en cordones de alimentación portátiles de VE
56.14.2	Caution – Do not use this product if there is any damage to the EV cable, the plug, or the EV connector	Attention – Ne pas utiliser ce produit si le câble VÉ, la fiche ou le connecteur est endommagé	Precaución – No utilizar este producto si existe un daño en el cable del VE, el receptáculo o el conector del VE

Single User - Hard Copy || Purchased by Booth Varian From SAI Global - ILI Publishing on 8/18/2014 8:38:39 AM || ALL RIGHTS RESERVED

UL COPYRIGHTED MATERIAL –
NOT AUTHORIZED FOR FURTHER REPRODUCTION OR
DISTRIBUTION WITHOUT PERMISSION FROM UL

No Text on This Page

Single User - Hard Copy || Purchased by Beuth Verlag From SAI Global - ILI Publishing on 6/16/2014 8:38:39 AM || ALL RIGHTS RESERVED

UL COPYRIGHTED MATERIAL –
NOT AUTHORIZED FOR FURTHER REPRODUCTION OR
DISTRIBUTION WITHOUT PERMISSION FROM UL